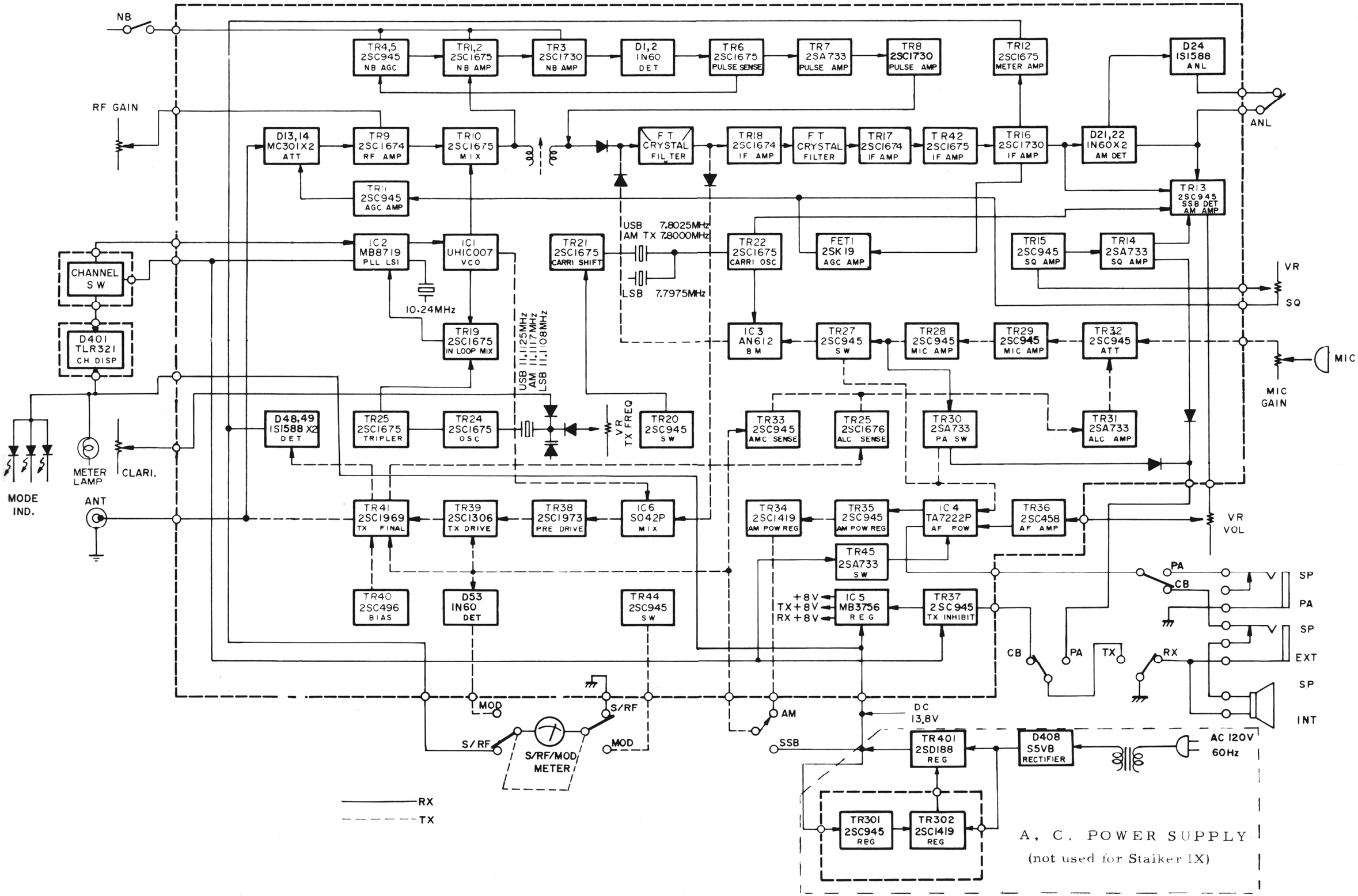
NB
TR4,5 2SC945 NB AGC
TR1,2 2SC1675 NB AMP
TR3 2SC1730 NB AMP
D1,2 1N60 DET
TR6 2SC1675 PULSE SENSE
TR7 2SA733 PULSE AMP
TR8 2SC1730 PULSE AMP
TR12 2SC1675 METER AMP
D24 1S1588 ANL
ANL
RF GAIN
D13,14 MC301X2 ATT
TR9 2SC1674 RF AMP
TR10 2SC1675 MIX
F T CRYSTAL FILTER
TR18 2SC1674 IF AMP
F T CRYSTAL FILTER
TR17 2SC1674 IF AMP
TR42 2SC1675 IF AMP
TR16 2SC1730 IF AMP
D21,22 1N60X2 AM DET
TR11 2SC945 AGC AMP
TR13 2SC945 SSB DET AM AMP
USB 7.8025MHz
AM TX 7.8000MHz
LSB 7.7975MHz
IC2 MB8719 PLL LSI
IC1 UHIC007 VCO
TR21 2SC1675 CARRI SHIFT
TR22 2SC1675 CARRI OSC
FET1 2SK19 AGC AMP
TR15 2SC945 SQ AMP
TR14 2SA733 SQ AMP
VR
SQ
CHANNEL SW
D401 TLR321 CH DISP
10.24MHz
TR19 2SC1675 IN LOOP MIX
USB 11.1125MHz
AM 11.1117MHz
LSB 11.1108MHz
IC3 AN612 BM
TR27 2SC945 SW
TR28 2SC945 MIC AMP
TR29 2SC945 MIC AMP
TR32 2SC945 ATT
MIC
MIC GAIN
D48,49 1S1588 X2 DET
TR25 2SC1675 TRIPLER
TR24 2SC1675 OSC
VR TX FREQ
TR20 2SC945 SW
TR33 2SC945 AMC SENSE
TR25 2SC1676 ALC SENSE
TR30 2SA733 PA SW
TR31 2SA733 ALC AMP
METER LAMP
CLARI.
MODE IND.
ANT
TR41 2SC1969 TX FINAL
TR39 2SC1306 TX DRIVE
TR38 2SC1973 PRE DRIVE
IC6 S042P MIX
TR34 2SC1419 AM POW REG
TR35 2SC945 AM POW REG
IC4 TA7222P AF POW
TR36 2SC458 AF AMP
VR VOL
TR45 2SA733 SW
PA
CB
SP
PA
SP
EXT
SP
INT
TR40 2SC496 BIAS
D53 1N60 DET
TR44 2SC945 SW
+8V
TX+8V
RX+8V
IC5 MB3756 REG
TR37 2SC945 TX INHIBIT
CB
PA
TX
RX
MOD
S/RF
S/RF
MOD
S/RF/MOD METER
AM
SSB
DC 13.8V
TR401 2SD188 REG
D408 S5VB RECTIFIER
AC 120V 60Hz
RX
TX
TR301 2SC945 REG
TR302 2SC1419 REG
A. C. POWER SUPPLY
(not used for Stalker IX)