Messenger Class AB1-Model 125

RB5-5 RELAY BOARD

R1-6.8K Ω 1/4 Watt Carbon Film Resistor
R2-470 Ω 1/4 Watt Carbon Film Resistor
R3-3.3M Ω 1/4 Watt Carbon Film Resistor
R4-1K Ω 1/4 Watt Carbon Film Resistor
C1-.01uF Disc Cerramic Capacitor
C2-5pF Disc Cerramic Capacitor
C3-.01uF Disc Cerramic Capacitor
C4-10uF/25V Electrolylic Capacitor
C5-.01uF Disc Cerramic Capacitor
C6-.01uF Disc Cerramic Capacitor
C7-.01uF Disc Cerramic Capacitor
C8-.01uF Disc Cerramic Capacitor
C9-.01uF Disc Cerramic Capacitor
C10-150pF Disc Cerramic Cap
C11-.01uF Disc Cerramic Cap
C12-150pF Disc Cerramic Cap
D1-1N4148 Diode
D2-1N4148 Diode
D3-1N4148 Diode
L1-22uH Inductor
L2-22uH Inductor
Q1-2N3904 Transistor
Q2-2N3906 Transistor
RLY1-DPDT 2 Amp Relay
RLY2-DPDT 2 Amp Relay

A100-2 MOTHER BOARD

R5-90 Ω 5Watt Wire Wound Resistor
R6-1K Ω 1/4 Watt Carbon Film Resistor
R7-1K Ω 1/4 Watt Carbon Film Resistor
R8-1K Ω 1/4 Watt Carbon Film Resistor
R9-10 Ω 1/2 Watt Carbon Film Resistor
R10-100 Ω 2 Watt Carbon Film Resistor
C13-100uF 25V Electrolytic Capacitor
C14-.01uF Disc Cerramic Capacitor
C15-100pF Dipped Mica Capacitor
C16-.001uF Polyester Film Capacitor
C17-1000pF DM19 Dipped Mica Capacitor
C18-.01uF Disc Cerramic Capacitor
C19-100pF DM15 Dipped Mica Capacitor
C20-.01uF Disc Cerramic Capacitor
C21-.01uF Disc Cerramic Capacitor
C22-.01uF Disc Cerramic Capacitor
C23-.01uF Disc Cerramic Capacitor
C24-.01uF Disc Cerramic Capacitor
D4-1N4001 Diode
D5-LED T1
D6-LED T1
D7-LED T1
D8-1N5400 Diode
F1-AGC20 Amp Fuse
L3-22uH Inductor
L4-R F BEADS
Q3-SD1446 Thomson Transistor
S1-SPST Switch (AM/SSB Delay)
S2-SPST Switch (REC ON/OFF)
S3-SPST Switch (PWR ON/OFF)
T1-4 Turn Transformer 1/2 Inch Long
T2-4 Turn Transformer 1 Inch Long
DC Cable-#14 Red PVC
DC Cable-#14 Black PVC

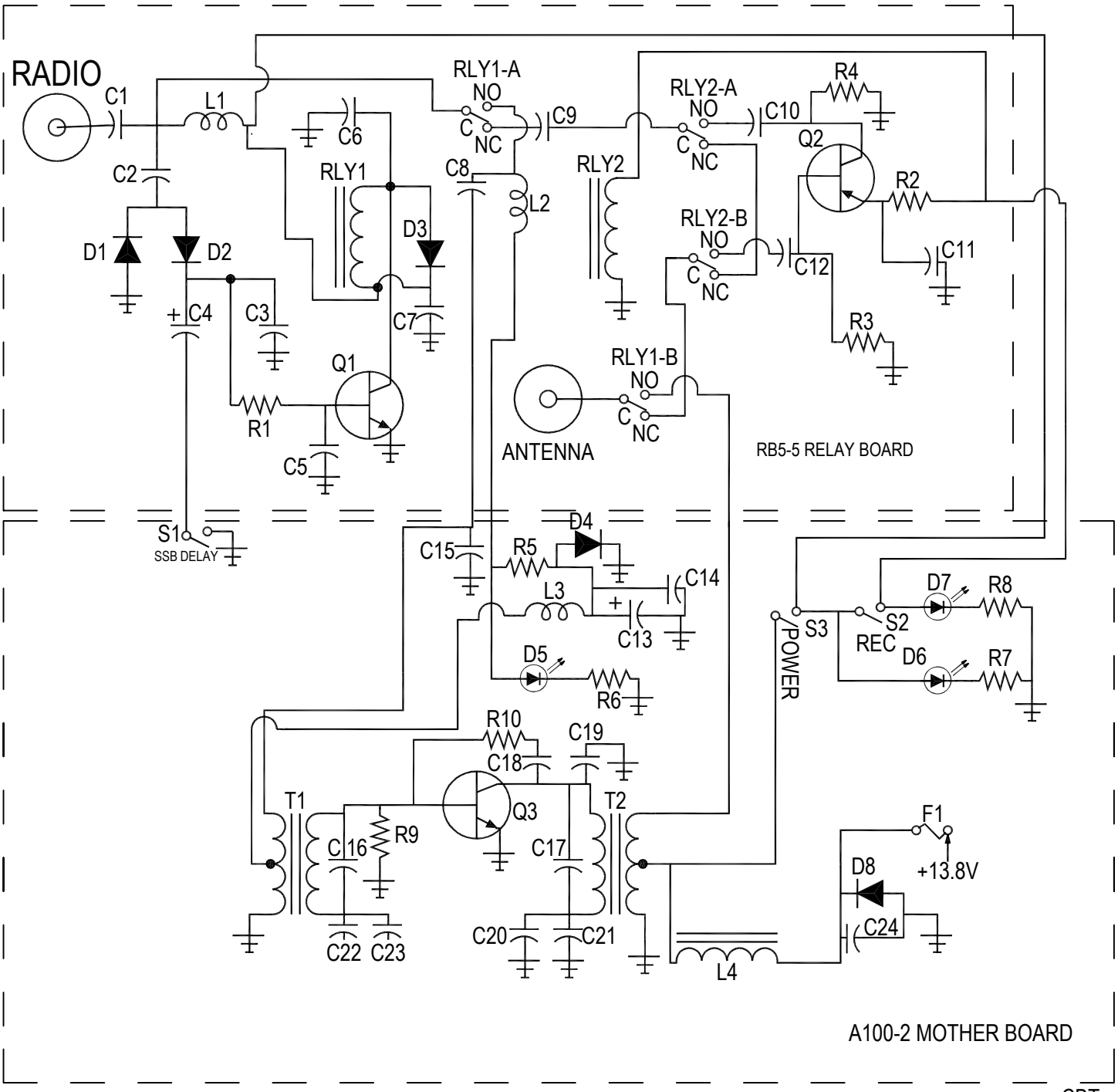

CBT