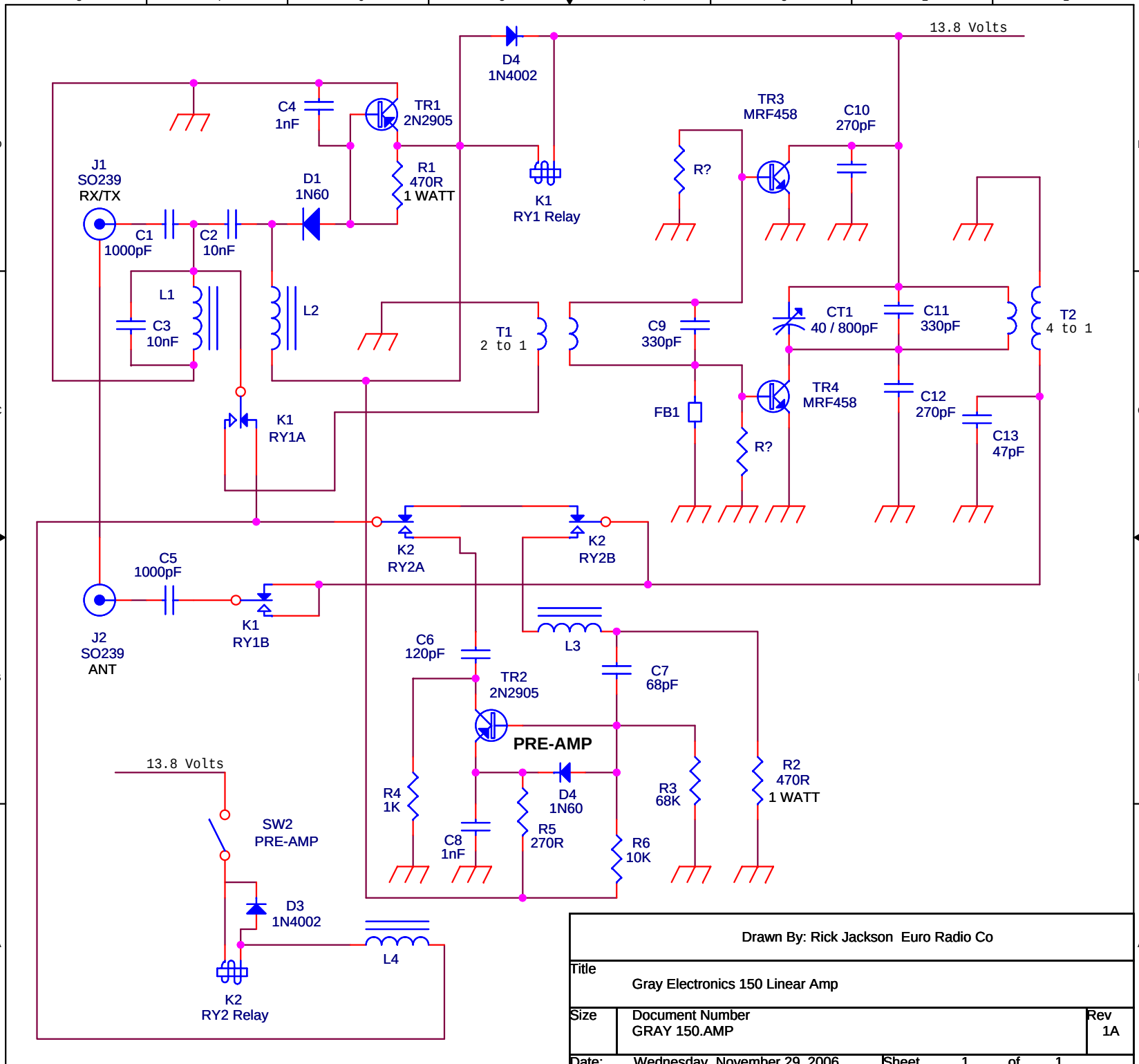
13.8 Volts
D4
1N4002
C4
1nF
TR1
2N2905
TR3
MRF458
C10
270pF
J1
SO239
RX/TX
D1
1N60
R1
470R
1 WATT
K1
RY1 Relay
R?
C1
1000pF
C2
10nF
L1
C3
10nF
L2
T1
2 to 1
C9
330pF
CT1
40 / 800pF
C11
330pF
T2
4 to 1
FB1
TR4
MRF458
C12
270pF
C13
47pF
R?
K1
RY1A
K2
RY2A
K2
RY2B
C5
1000pF
J2
SO239
ANT
K1
RY1B
C6
120pF
L3
C7
68pF
TR2
2N2905
PRE-AMP
13.8 Volts
R4
1K
D4
1N60
R3
68K
R2
470R
1 WATT
SW2
PRE-AMP
C8
1nF
R5
270R
R6
10K
D3
1N4002
L4
K2
RY2 Relay
Drawn By: Rick Jackson Euro Radio Co
Title
Gray Electronics 150 Linear Amp
Size
Document Number
GRAY 150.AMP
Rev
1A
Date: Wednesday, November 29, 2006
Sheet 1 of 1