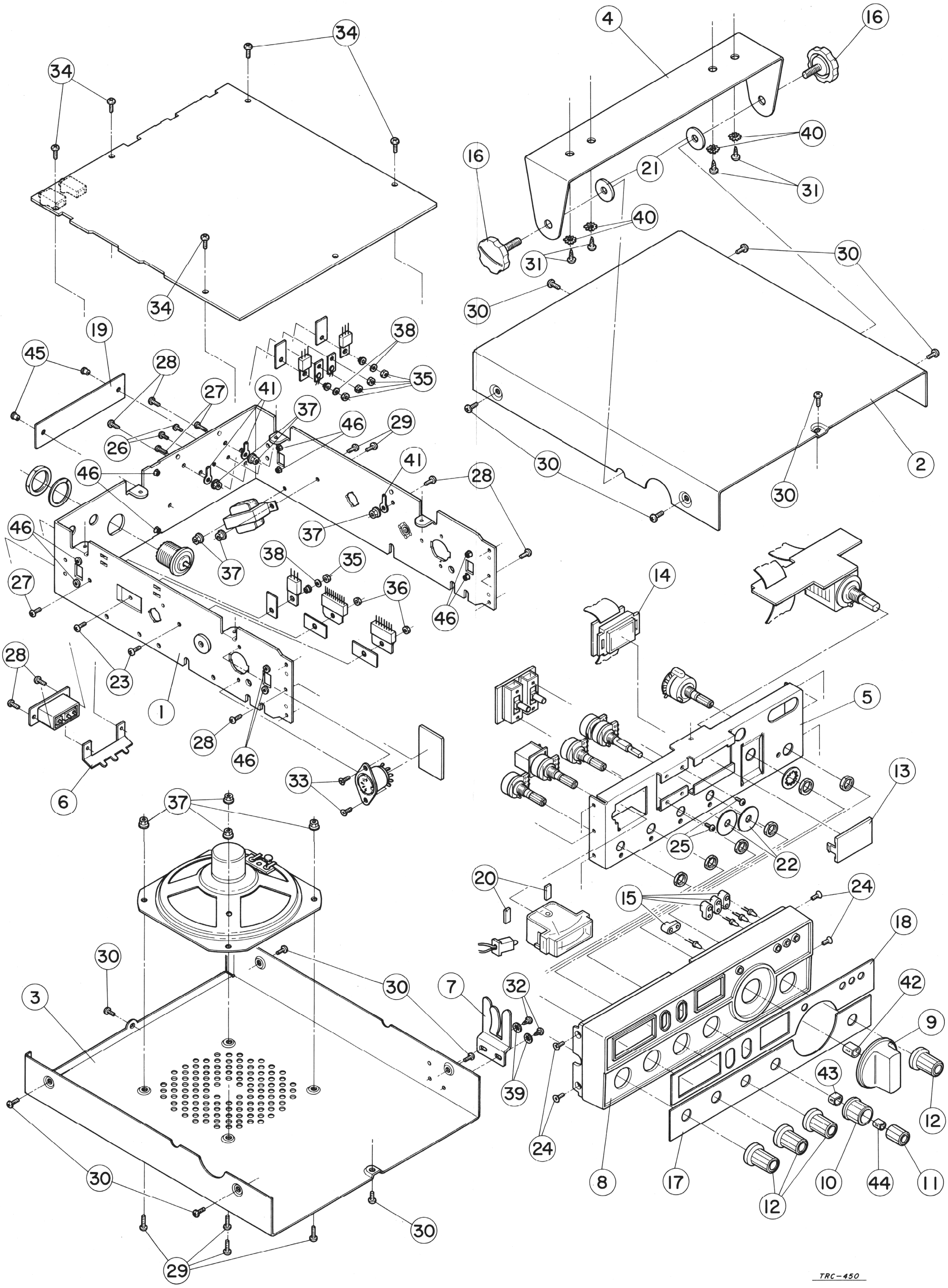EXPLODED VIEW