SCHEMATIC DIAGAM

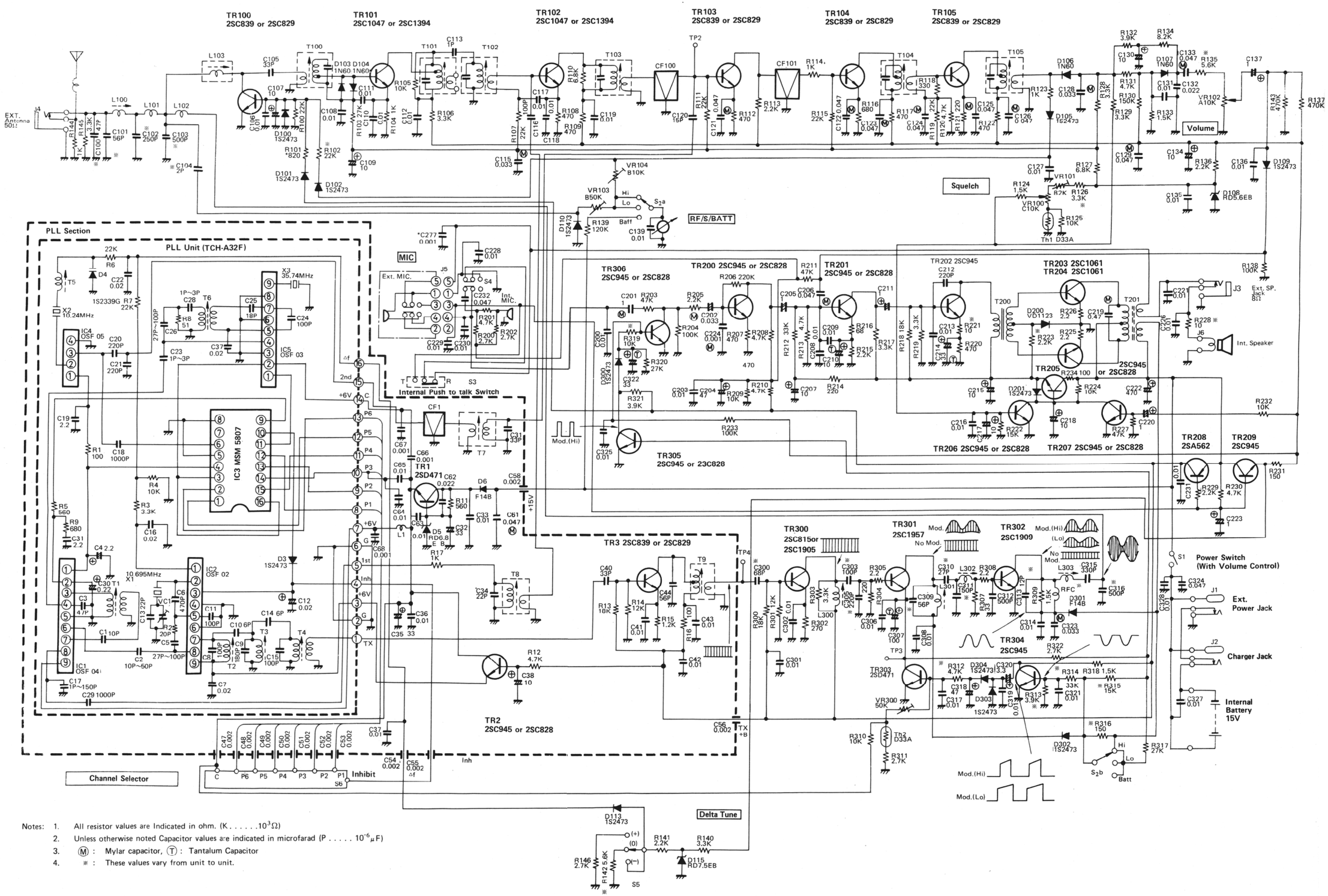

Notes:
1. All resistor values are Indicated in ohm. (K . . . . . $10^3\Omega$)
2. Unless otherwise noted Capacitor values are indicated in microfarad (P . . . . . $10^{-6}\mu F$)
3. Ⓜ : Mylar capacitor, Ⓣ : Tantalum Capacitor
4. ※ : These values vary from unit to unit.