INSTRUCTION MANUAL
MODE D'EMPLOI
GEBRUIKSAANWIJZING

JUMBO

HAM
INTERNATIONAL

Specifications

General

Channels	120 channels in 3 bands
Modulation Modes	FM, AM, LSB, USB
Frequency Range	26.965 to 28.305 MHz
Tune	±5 kHz
Frequency Control	Phase-locked synthesizer
Frequency Tolerance	±0.005%
Frequency Stability	±0.003%
Operating Temperature Range	−30°C to +50°C
Microphone	Plug-in [4-pin], 600 Ohm dynamic type
AC Input Voltage	220V, 50/60 Hz
AC Power Consumption	75W
DC Current Drain	1.5A [at maximum audio modulation] 0.5A [at standby with no signal]
Antenna Connectors [A and B]	Standard SO-239 type
Semiconductors	6 ICs, 2 FETs, 52 Transistors (Excluding the *Roger Beep* unit)
Meter #1	Indicates relative RF power output/antenna SWR,
Meter #2	Indicates received signal strength

Transmitter

Power Output	4W or 0.5W—AM/FM, 12W (PEP)-Single sideband
SSB Generation	Dual-balanced modulation
AM Modulation	Class B amplitude, collectors modulation
AM Modulation Capability	100%
Harmonic and Spurious Emission	Better than 60 dB
AM/FM Frequency Response	400 to 5,000 Hz
SSB Frequency Response	400 to 3,000 Hz
Output Impedances [A and B]	50 Ohms unbalanced
Output Indicators	RF Meter shows relative RF output power
Tune	±4.5 kHz minimum

Receiver

FM Sensitivity	0.5 μV for 20 dB S/N
AM Sensitivity	0.7 μV for 10 dB S/N
SSB Sensitivity	0.2 μV for 10 dB S/N
AM/FM Selectivity	5 dB at 4 kHz, 50 dB at 10 kHz
SSB Selectivity	5 dB at 2 kHz.
Image Rejection	More than 50 dB
IF Rejection	More than 80 dB at 455 kHz
AGC	Change in audio output: less than 12 dB from 10 μV to 0.4V
Squelch	Adjustable – threshold less than 0.7 μV
Audio Frequency Response	400 to 2,500 Hz
Distortion	Less than 10% at 3 watts output 8 Ohms
Adjacent Channel Rejection	>75 dB at 0.3 μV
Cross Modulation	>50 dB
Intermediate Frequency	10.695 MHz [AM-1st, SSB], 455 kHz [AM-2nd]
Clarifier Range	±800 Hz
Tune Range	±4.5 kHz minimum
Noise blanker	IF single gate type
Audio Output Power	More than 3 watts into 8 Ohms
Built-in Speaker	8 Ohms, dynamic
External Speaker (optional)	Disables internal speaker when connected

General Description

The *HAM International JUMBO* is an advanced FM/AM/SSB 2-way transceiver primarely designed for base station operation. It employs the very latest technology to provide 120 channels operation for 3 modes of transmitting and receiving by means of the phase-locked loop (PLL) circuitry. The use of the PLL circuitry assures a precise on-frequency operation on every channel that is unmatched by conventional frequency synthesis system units. The *JUMBO* also feateres the following:

- "Roger Beep" built-in.
- Electromagnetic TX-RX switching enables selective call facility.
- Two relay switched antenna inputs.
- Tune facility allows between-channel operation specially in SSB with more convencience than VFO.
- RF power (4W/0.5W) switch provided.
- Optional: Table pre-amplified compressor microphone model *TW232S* from *Ham International.*
- 120 channels in 3 bands.
- Modulation control lamp.
- Output for frequency counter.
- Giant LED's assures bright channel display.
- Detachable handgrips for professional 19" rack mounting.

Description Générale

L'émetteur-récepteur *JUMBO* de *HAM International* utilise les techniques les plus avancées dans le domaine des radio-communications. On y trouve les innovations techniques les plus récentes tel que la modulation de fréquence à déviation étroite, les 120 canaux continus produit par circuit intégré à fonction logique (PLL) ainsi que la commutation électronique émission-réception. Le *JUMBO* offre aussi les nouveautés suivantes:

- *Roger Beep* incorporé.
- Connecteur prévu pour l'utilation d'un appel sélectif Ham International.
- 2 entrées d'antennes commutable par relay.
- Le bouton "TUNE" permet aussi d'opérer sur tous les canaux intermédiaires spécialement en SSB avec plus de confort qu'un VFO.
- Switch sortie RF (4W/0.5W) prévu.
- En option: Le micro de table préamplifié à compresseur, le modèle *TW232S* de *HAM International.*
- 120 canaux divisés en 3 bandes.
- Lampe de controle de la modulation.
- Sortie pour compteur de fréquence.
- Diodes electro-luminescentes géantes pour affichage digital très lisible.
- Poignées détachables pour montage en rack professionnel 19".

Algemene Beschrijving

De *HAM International JUMBO* is een technisch vergevorderde FM/AM/SSB zenderontvanger ontworpen met het oog op een gebruik hoofzakelijk als basisstation. De laatste technologische snufjes werden gebruikt om 120 kanalen voort te brengen door middel van digitale frekwentie syntese met Phase lock loop (PLL circuits). Deze PLL schakeling verzekert een nauwkeurige frekwentie van ieder kanaal, in alle modes. Dit systeem is wat betreft kwaliteit niet te evenaren door de konventionele kristal synthesizers. De *JUMBO* heeft bovendien een aantal uitzonderlijke extras.

- 120 kanalen in 3 banden
- Ingebouwde Roger Beep
- Aansluiting voor selektieve systemen
- 2 omschakelbare antenne aansluitingen (vb beam + GP)
- Tuning welke toelaat tussen de kanalen te werden vooral in SSB gemakkelijker dan met een VFO
- RF vermogen (4W/0.5W) schakelaar voorzien.
- Controle lamp voor de modulatie
- Aansluiting voor frekwentie teller
- Zeer heldere kanaalaanduiding met reuze led display
- Met Professionele afneembare bandvaten voor montage in een HIFI RACK (19 inch)
- Bijbehoren tegen meerprijs te bekomen van *Ham International* — TW232S: Top kwaliteit tafel mikrofoon met ingebouwde kompressor-voorversterke.

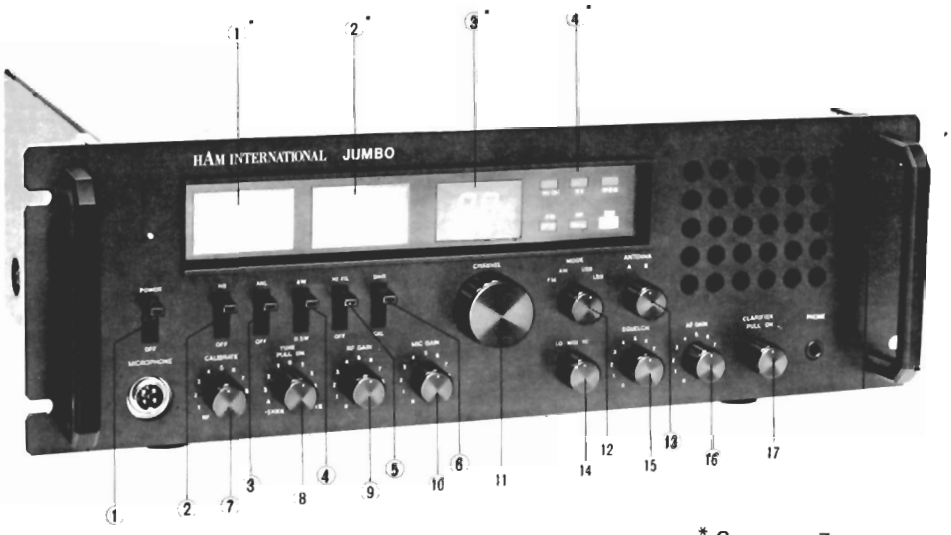

* See page 7.

Installation

Connection

The transceiver is supplied with AC power cord. Proceed as follows to complete all necessary connections to the transceiver:

1. Your transceiver has two standard antenna connectors of type SO-239 located on rear panel, for easy connection to standard PL-259 coax plugs. Use only enough cable to suit your needs. This will insure a proper impedance match and maximum power transfer from the transmitter to the antenna. If the coax antenna cable must be made longer, use coax cable with high efficiency and quality such as type RG-8/u.
2. *AC Power Operation:* Use 220 volts AC power for base station operation. Plug AC power cord into a working 220 volts household outlet.

Noise Interference

There are several kinds of noise interferring you may encounter in base station operation. Some of these noise sources are; fluorescent buzz, nearby commercial broadcast, electrical appliance, lawnmower, and electrical storms, etc. Commercial products are available to reduce interference from these sources. Consult your dealer or CB/amateur radio supply shops.

Antennas

Ham International has designed a high power antenna for best performance in local and DX use with large bandwidth for equal quality on 120 channels: The *Superstar.*

Remote Speaker

The external speaker jack (EXT. SP) on the rear panel is used for remote receiver monitoring. The external speaker should have 8 ohms impedance and be able to handle at least 3 watts. When the external speaker is plugged in, the internal speaker is disconnected.

Installation

Connections

Procédez aux connections dans l'ordre suivant:

1. Votre Jumbo est équippé sur le panneau arrière de deux connecteurs d'antenne du type SO-239 qui conviennent pour les fiches standard PL259. Utilisez du cable coaxial de 50 ohms pour vos rallonges d'antennes.
2. *Utilisation sur le secteur AC 220V* Connecter le cable d'alimentation AC dans la prise prévue à cet effet sur le panneau arrière et l'autre extrémité dans une prise de courant 220V.

ANTENNAS

HAM INTERNATIONAL a prévu pour votre Jumbo une antenne de base de haut rendement avec une large bande passante pour un résultat optimal en local ou en DX sur les 120 canaux: le modèle SUPERSTAR.

Plaatsing

Aansluitingen

1. Deze zenderontvanger heeft twee antenne aansluit mogelijkheden op het achterpaneel. Gebruik uitsluitend kabel van 50 ohm en de klassieke PL259 Plugs (amphenols).
2. *Gebruik op 220V netspanning* Sluit het overeenkomstige snoer op de AC aansluitplug en op het stopkontakt 220V.

Antennes

Ham International heeft voor uw *JUMBO* een bijpassende antenne met hoog rendement en een grote bandbreedte voor een maksimum resultaat zowel voor lokaal als voor DX: *De Superstar.*

Control Function

1 *Power Switch*
Place in POWER (lever up) position to apply power to the unit.

2 *Noise Blanker Switch*
This switch activates the noise blanker circuit when placed in NB (lever up) position. The noise blanker is very effective for repetitive impulse noise such as ignition interference.

3 *ANL Switch*
When this switch is placed in the ANL (lever up) position, the automatic noise limiter in the audio is activated. The ANL may be used when noises generated from such sources as atmospheric discharge, electronic machinery etc., are present.

4 *RF Power (4W/0.5W) Switch*
Permits you to adjust the RF output when AM/FM transmitting – 4W or 0.5W.

5 *High Filter Switch*
This switch is used to remove high frequency noise from received signal.

6 *SWR-Calibrate Switch*
This switch serves for SWR check of your antenna:
CALIB (lever down): Used to calibrate the SWR meter before measuring your antenna's SWR ratio.
SWR (lever up): Used to directly read the SWR of antenna connected to the unit. See *SWR check.*

7 *Calibrate Control*
This control is used for calibrating the SWR meter for accurate SWR measuring in conjunction with the *SWR-CALIB Switch 6).*

8 *Tune*
In pulled position, allows to vary the operating frequency with plus minus 4.5 kHz and functions as a VFO. In pushed position, the frequency is the center frequency of the channel displayed.

9 *RF Gain Control*
This control is used primarily to optimize reception sensitivity in strong signal areas. Under normal operating conditions the control should be turned fully clockwise. When strong overload or distorted signals are received rotate this control counterclockwise to reduce gain.
Note: The *Squelch Control 15)* may require readjustment with reduced *RF Gain Control.*

Face Avant

1 *POWER*
Placer ce switch en position power pour alimenter l'appareil.

2 *NB*
Met le filtre "noise blanker" incorporé en fonctionnement pour atténuer seulement les parasites tel que ceux produit par les moteurs à explosion.

3 *ANL*
Met le filtre "ANL" incorporé en fonctionnement pour atténuer les bruits de fond pendant la réception.

4 *Switch Sortie RF (4W/0.5W)*
Controle le niveau sortie RF en emission MA/MF – 4W ou 0.5W.

5 *HI-FIL*
Cet interrupteur permet de diminuer les sous aigus indésirables signaux reçus.

6 *SWR/Calibrate*
- En position *CALIB:* Pour calibrer le Tos-mètre avant la mesure du TOS.
- En position *SWR:* Lecture du TOS sur le TOS-mètre.

7 *Calibrate*
Permet de calibrer le TOS-mètre lorsque l'inverseur SWR-CALIB est en position CALIB.

8 *Tune*
- En position tirée, ce bouton, permet de varier la fréquence d'opération de ±4,5 kHz par rapport à la fréquence du canal indiqué.
- En position poussée le tune ne fonctionne pas.

9 *RF Gain*
Pour atténuer les signaux trop puissance en réception; sa position normale est la position maximale à droîte.

10 *MIC Gain*
Un circuit pré-amplifieur pour le micro est incorporé dans votre JUMBO et permet une adaptation optimale à vos conditions de transmission.

11 *Channel*
Le bouton permet de déterminer le canal d'opération en combinaison avec le selecteur de bande.

12 *Mode*
Le bouton détermine le mode de modulation soit:
FM: Fréquence modulée à déviation étroite.
AM: Modulation d'amplitude.

Voorzijde

1 *Power*
Plaats deze schakelaar in de positie *POWER* om het toestel aan te schakelen.

2 *NB*
Plaats de schakelaar omhoog om de Noise Blanker in the schakelen. Deze is alleen effectief om korte repeterende stoorpulsen zoals ontstekingsstoring van wagens te verminderen.

3 *ANL*
De schakelaar omhoog stelt de automatische ruis en storingsonderdrukker in werking in het audio degeelte, nuttig om atmosferische en allerhande storingen te onderdrukken. Gewoonlijk wordt hij continu ingeschakeld.

4 *RF Vermogen Schakelaar (4W/0.5W)*
Regelt de AM/FM zendvermogen bij de zenden – 4W of 0.5W.

5 *HI FIL*
Met deze schakelaar kan men scherpe tonen tijdens de ontvangst wegsnijden.

6 *SWR-Calibrate*
In de positie *Calib*: om voor het meten van de staande golfverhouding de meter in te stellen. In de positie *SWR:* aflezing van de staande golf verhouding(SWR).

7 *Calibrate*
Hiermee regelt men de naald van de SWR meter op set terwijl de *SWR/Calib* schakelaar in de stand Calib staat.

8 *Tune*
Als men de knop uittrekt kan men zowel zend als ontvangst frekwentie ±4,5 kHz bijregelen als de knop ingedrukt is krijgt men automatisch de juiste kanaalfrekwentie.

9 *RF Gain*
Om te sterke signalen bij ontvangst af te zwakken deze regeling staat normaal op maksimum (wijzerzin) = minimum verzwakking.

10 *Mic Gain*
In de *JUMBO* is een mikrofoon voorversterker ingebouwd, deze regelaar laat toe elke mikrofoon of stem optimaal aan te passen.

11 *Channel*
In samenspel met de bandschakelaar kan men hiermee elk gewenst kanaal kiezen.

10 *Microphone Gain Control*
A preamplifier circuit is built into this unit to increase microphone gain. Experiment with this control for the setting that will best suit your individual use.

11 *Channel Selector*
This control selects any one of the 120 citizens band channels desired. The selected channel is digitally displayed in the window directly above the control.

12 *Mode Selector*
This control selects the mode of operation in either FM, standard AM, upper sideband, or lower sideband. Transmission in a mode can only be communicated to stations operating in the same mode.

13 *Antenna A-B Selector*
For switching between two types of antennas or dummy load that may be connected to the unit. You may connect a ground plane antenna (non-directional) to *Antenna A* receptacle, and a beam type antenna (highly directional) to the *Antenna B* receptacle on rear panel for long-range communications.

14 *Band Selector (HI-MID-LOW)*
This is used in conjunction with the *Channel Selector* and selects one of 3 bands which are composed of 40 channels. Setting this to *Low* position enables you to operate over channels 1 through 40; *MID* position channels 41 to 80; and *Hi* position channels 81 to 120.

15 *Squelch Control*
This control is used to cut off or eliminate receiver background noise in the absence of an incoming signal. For maximum receiver sensitivity it is desired that the control be adjusted only to the point where the receiver background noise or ambient background noise is eliminated. Turn fully counterclockwise then slowly clockwise until the receiver noise just disappears. Any signal to be received must now be slightly stronger than the average received noise. Further clockwise rotation will increase the threshold level which a signal must overcome in order to be heard. Only strong signals will be heard at a maximum clockwise setting.

16 *AF Gain (Volume) Control*
Permits you to adjust the listening level when receiving.

LSB, USB: Modulation d'amplitude à bande latérale unique (B.L.U.)
LSB bande inférieure.
USB bande supérieure.

13 *Antenne A et B*
Branche l'antenne connectée à l'entrée A ou B.

14 *Band Selector*
Suivant le canal choisit, placer ce selecteur en position:
L pour les canaux de 1 à 40.
M pour les canaux de 41 à 80.
H pour les canaux de 81 à 120.

15 *Squelch*
Le squelch permet d'éliminer le bruit de fond indésirable en réception en l'absence de signal significatif. Plus le bouton est tourné à droite, plus fort le signal doît être pour ouvrir le récepteur.

16 *Volume*
Controle le niveau sonore en réception.

17 *Clarifier*
Fonctionne comme "delta-tune" en AM ou FM et permet de clarifier la réception en B.L.U. (USB et LSB) en position tirée. En position poussée le clarifier ne fonctionne pas et la f. de réception est la même que celle d'émission.

12 *Mode*
Hiermee kann een der modulatie soorten gekozen worden.
FM: Frekwentie modulatie met heel smalle zwaai.
AM: Amplitude modulatie.
LSB-USB: Enkelzijband modulatie (SSB).
LSB = Lage zijband.
USB = Hoge zijband.

13 *Antenne A en B*
Mogelijkheid tot 2 antennes gelijktijdig aan te sluiten en met de schakelaar in een oogwenk om te schakelen vb. van Horizontaal naar vertikaal.

14 *Band selector*
Stand *L* geeft de kanalen 1 tot 40.
Stand *M* geeft de kanalen 41 tot 80.
Stand *H* geeft de kanalen 81 tot 120. (Opgepast sommigen van deze laatste vallen in de 10m amateurband).

15 *Squelch*
Hiermee kan men het vervelende achtergrond geruis bij afwezigheid van uitzendingen, of het lawaai van zwakke ongewenste stations wegwerken.

16 *Volume*
Regelt de geluidssterkte bij de ontvangst.

17 *Clarifier (Fijnregeling)*
Deze regeling laat toe de ontvanger af te stemmen op uitzendingen welke niet op de juiste frequentie zijn. In SSB wordt deze gebruikt om de juiste toonhoogte van de klank te verkrijgen voor een natuurgetrouwere weergave. De clarifier is slechts ingeschakelt als de knop uitgetrokken is. In *Duw* positie is de ontvangst frekwentie gelijk aan de zendfrekwen tie en werkt de clarifier niet.

17 *Clarifier*
The clarifier works only in pulled position. In pushed position the clarifier does not operate and the frequency of the receiver is same as the transmitter.

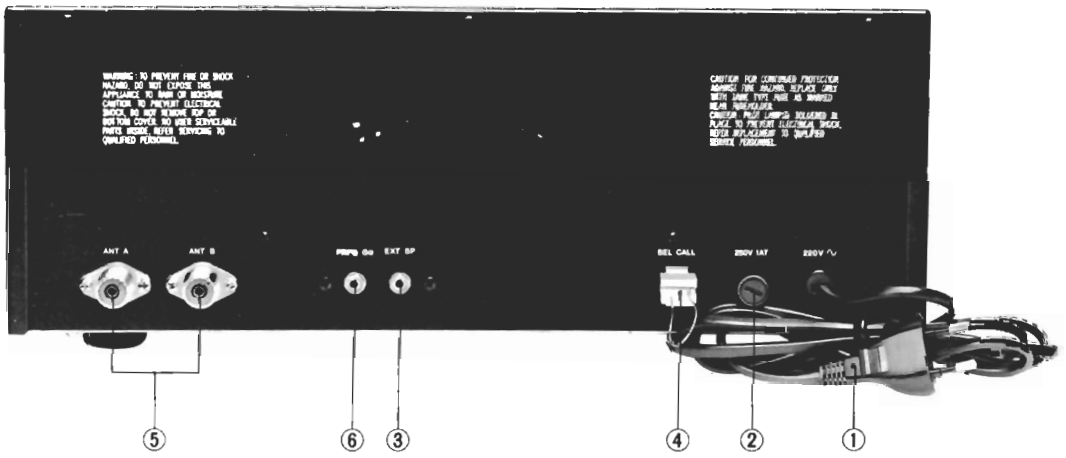

Rear Panel

1 *220V AC Power Cable.*
2 *Fuse*
1A, 250V.
3 *External Speaker Jack*
For 8 Ohm external Speaker connection. When the plug is inserted to this jack, the internal speaker is silenced.
4 *Selective Call Jack*
Used to connect the optional selective call unit (available from Ham International).
5 *Antenna Connectors A/B*
Used to connect antennas to the unit and mate with 50 Ohm coaxial plug, type PL-259.
6 *Frequency Counter Output.*

Face Arrière

1 *Cable d'alimentation 220V AC.*
2 *Fusible*
1A, 250V.
3 *Connecteur ext. sp.*
Pour connecter un haut-parleur extérieur de 8 ohms. En introduisant la fiche, le HP intérieur est mis hors circuit.
4 *Connecteur Sel Call*
Prévu pour connecter un système d'appel selectif HAM International.
5 *Connecteur d'antenne A et B*
Prévu pour connecter le cable coaxial 50 ohms par l'intermédiaire d'une fiche PL259.
6 *Sortie pour fréquence-mètre.*

Achter Zijde

1 *Aansluitsnoer voor AC 220V.*
2 *Fuse*
Zekering 1A, 250V.
3 *Ext. Sp.*
Aansluitbus voor extra luidspreker, de inwendige luidspreker wordt bij het insteken van een plug uitgeschakeld.
4 *Selektief Call*
Aansluiting, vraag raad aan uw Ham international verdeler.
5 *Antenne aansluitbussen A en B*
6 *Uitgang naar frekwentie meter*

Indicators

See page 3.

1 *Signal Strength Meter*
The left hand meter provides a relative indication of the signal strength of a received signal in S units during reception. Note that SSB signals will respond this meter only during voice modulation. This being due to the fact that SSB transmissions do not contain a continuous RF carrier as is found on AM or FM.

2 *RF Power/SWR Meter*
Used for two purposes – to indicate relative transmitter power (4W or 0.5W AM/FM – selectable, 12W PEP SSB) when transmitting; to indicate the antenna SWR [standing wave ratio].

3 *Channel Display*
This is an LED [light emitting diode] digital readout which indicates the channel selected by the *Channel Selector 11*).

4 *Function Indicators*
The LED indicators located in this area permit you to know instantly the mode with which the unit has been engaged.
Hi-CH: Lights up when unit is operating in *Hi* 40 channels.
On Air: Lights up during transmit mode indicating you are on-the-air.
Modulation: Lights up during transmitting with intensity varied according to the strength of your voice modulation.
FM, AM, SSB: Indicates a mode selected by the *Mode Selector 12*).

Push-to-Talk Microphone

The receiver and transmitter are controlled by the *Push-to-Talk* switch on the microphone. Press the switch and the transmitter is activated; release the switch to receive. When transmitting, hold the microphone two inches from the mouth and speak clearly in a normal voice. The radio comes complete with the low impedance dynamic microphone supplied.
Optional: TW232S table microphone.

Operating Procedure

To Receive
Important: Make sure antenna, power source, and microphone are connected before you operate.

1 Turn the unit on by setting the *Power Switch 1)* to *On* position. Now the meters, *Channel Display* and *Function Indicator* will be illuminated.
2 Temporarily, set the *Mode Selector 12)* in *AM* position.
3 Set the *Squelch Control 15)* in fully counterclockwise position and adjust the *AF Gain control 16)* for a comfortable listening level.
4 Listen to the background noise from the speaker. Turn the *Squelch Control 15)* slowly clockwise until the noise just disappears (no signal should be present). Leave the *Squelch Control* at this setting. The *Squelch Control* is now properly adjusted. The receiver will remain quiet until a signal is actually received. Do not advance the *Squelch Control* too far clockwise or some of the weaker signals will not be heard.
5 Set Tune and Clarifier in the pushed and center position respectively.
6 Select a desired mode of operation, FM, AM, SSB, or, USB. Adjust *Clarifier 17)* for advanced operation.

To Receive

1 Select the desired channel and mode of transmission.
2 If the channel is clear, depress the *Push-to-Talk* switch on the microphone. Speak in a normal tone of voice.

SWR Check

Though most antennas are factory-tuned, adjusting the length of antenna using the SWR meter may peak the antenna efficiency and protect the final RF power transistors from an overload due to mismatch. Proceed as follows:

1 Set the unit in the receive mode as instructed under the Operating Procedure to Receive section.
2 Set the Mode switch 12) to AM position; the SWR-Cal 6) switch to the Cal position.
3 Pressing the Push-to-Talk switch on the microphone and turn the Calibrate Control 7) clockwise (past click) so that the SWR meter pointer exactly coincides with the Set mark on the scale. Release the Push-to-Talk switch.
4 Set the SWR-Cal switch to the SWR position and depress the Push-to-Talk switch again. The SWR of your antenna is read directly on the scale. An SWR below 2 or less is desired as this indicates that over 95% of the transmitted power is broadcast into the air.

Note: If you find difficulty to obtain SWR readings smaller than 3 (ratio 1 is ideal though very hand to gain), consult the dealer to determine how to mach your antenna to your *JUMBO*.

Maintenance and Adjustment

The transceiver is specifically designed for the environment encountered in the base station use. The use of fully solid state circuitry and its rugged style result in high reliability. Should a failure occur, however, replace parts only with identical parts. Do not substitute. Refer to the Schematic Diagram and Replacement Parts List in this manual. If the performance described in the *Operation* section is not obtained, review the *Installation* section to insure that proper procedures were followed. If a problem still exists, refer to your *HAM International* dealer.

Circuit Description

The transceiver is a 120 channel CB radio which uses a phase locked loop [PLL] system of frequency synthesization to produce the crystal controlled channel and IF signals used in operation of the transmitter and receiver sections of the unit. The basic PLL system is comprised of a free-running voltage controlled oscillator (part of IC2), a phase detector, a reference crystal oscillator (Q3) and a programmable divider (IC1), as seen in diagram below.

PLL Theory (PTOS006 Circuit Board)

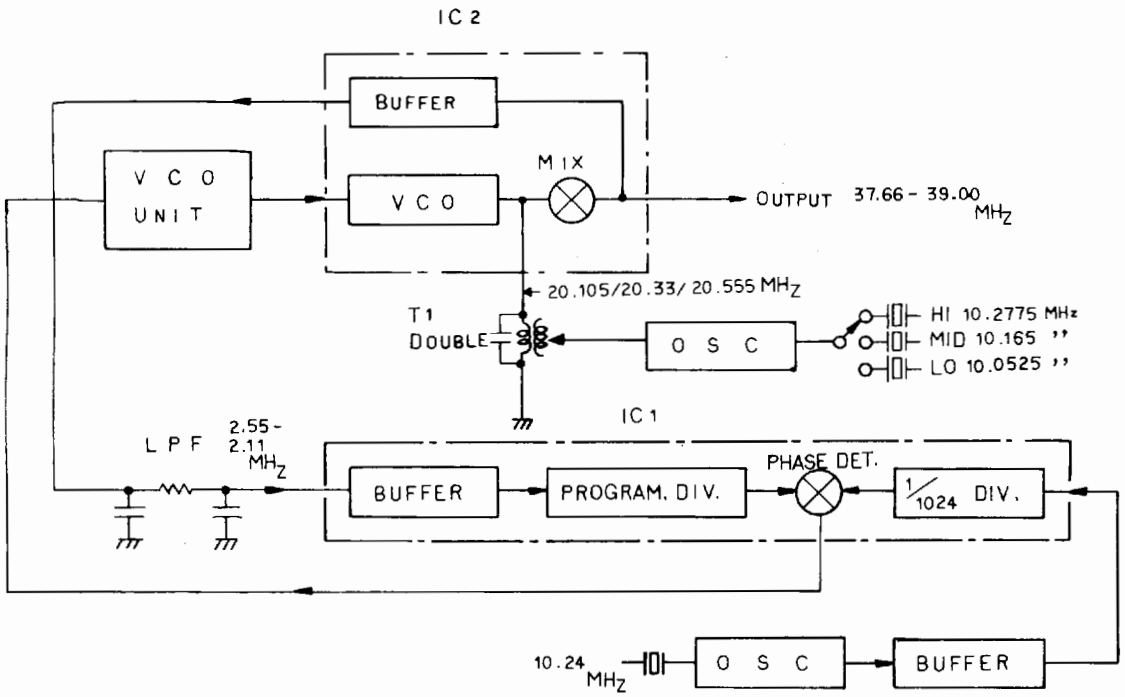

The voltage controlled oscillator [VCO] operates in the frequency range of 17.5550 to 18.4450 MHz in the AM/FM/USB mode and 17.5535 to 18.4435 MHz in the LSB mode, and is used to produce two output signals: #1; 37.660 to 39.000 MHz in the AM/FM/USB mode and 37.657 to 38.997 MHz in the LSB mode, #2; at 2.55 to 2.11 MHz. Reference frequency oscillator Q4 oscillates at 10.0525, 10.165, or 10.2775 MHz in accordance with the Band Selector switch (1.5 kHz lower when LSB mode). Its output is fed through the band-pass filter [BPF]/doubler resulting in an output signal, 20.105, 20.33, or 20.555 MHz in accordance with the band selected (3 kHz lower when LSB mode). This signal beats with the VCO free-running signal producing a 37.66 to 39.0 MHz in the AM,FM/USB mode and 37.657 to 38.997 MHz in the LSB mode, which is fed to the receiver first mixer [Q22] and also to IC3 (on main circuit board PTBM059), the transmitter mixer. The second VCO output signal, at 2.55 to 2.11 MHz is fed to the programmable divider in IC1. Simultaneously the 10.24 MHz output of Q3 [through the buffer.Q2] is applied to the programmable divider in IC1 and is divided down in 10 kHz steps. As a channel is chosen by the Channel Selector switch [SW-1 on PTS-W076], and *N* code signal is applied to the terminals [pin No. 9 to 15 of IC1] on the programmable divider in IC1, to preset the divider. The two signals, the crystal oscillated signal [10.24 MHz] from Q3, and the signal from the VCO via the lowpass filter [LPF] and buffer [in the IC1], are compared in the phase detector of IC1 and the phase detector produces a DC output voltage derived

from the phase difference in the signals fed to it. This DC output is applied through an LPF to the VCO, forming the phase loop. This DC voltage applied to the VCO causes it to shift frequency until its output signal locks up with the count-down frequency provided from reference oscillator Q3 [when two signals are in phase] at which point no DC output is produced in the phase detector, and th VCO remains *locked* on frequency. When a new channel is selected a new *N* code is applied to the programmable devider. The VCO is no longer locked because of the resulting phase difference in the phase detector, and it again shifts frequency to a locked condition, in turn producing 37 MHz output signals corresponding to the new channel programmed by the new N code. In summary it will be seen that a stable VCO frequency range will be produced, each specific frequency being determined by the N code selected by the Channel Selector switch.

Main Board Assembly (PTBM059)

The crystal oscillator Q12 is operating at 10.695 MHz in the AM/FM/USB mode, and 10.692 MHz in the LSB mode, controlled by the crystal, X3. This signal is #1; in the AM and FM modes of transmission, fed to the IC3 to be mixed with the first TX local oscillator frequency and result in 27 MHz transmitter frequencies, and #2; in the SSB modes of transmission, modulated through the balanced modulator IC4 with the audio output signal from the microphone amplifier, IC5. The resultant output of the balanced modulator is a double sideband, suppressed carrier signal. The crystal filter, XF, pass band is restricted to 3.5 kHz so that it allows only one sideband to pass through its output terminals, either USB or LSB mode, depending upon the Mode Selector switch selection. The exact frequency of which was determined by the Channel Selector switch selection and the PLL circuitry, as previously outlined, the resultant frequency, therefore, that is fed to the RF amplifier in IC3, is the channel frequency on the channel selected [channel 1 through 120 over 26.965 to 28.305 MHz]. The 27 MHz RF amplifier output is coupled to RF predriver transistors, Q7, 8, through T4, 5. The predrivers serve to isolate the oscillator and mixer stages from the output amplifiers, and at the same time provide a certain amount of power gain. Q8 output is applied to the base input of Q9, the RF driver stage and in turn to the Q10, the RF power output stage of the transmitter. These stages amplify the 27 MHz RF signal resulting in an output at L13 of 4W (or 0.5W) in AM or FM mode, and 12 watts PEP [peak envelope power] in the SSB mode.

TX Diagram

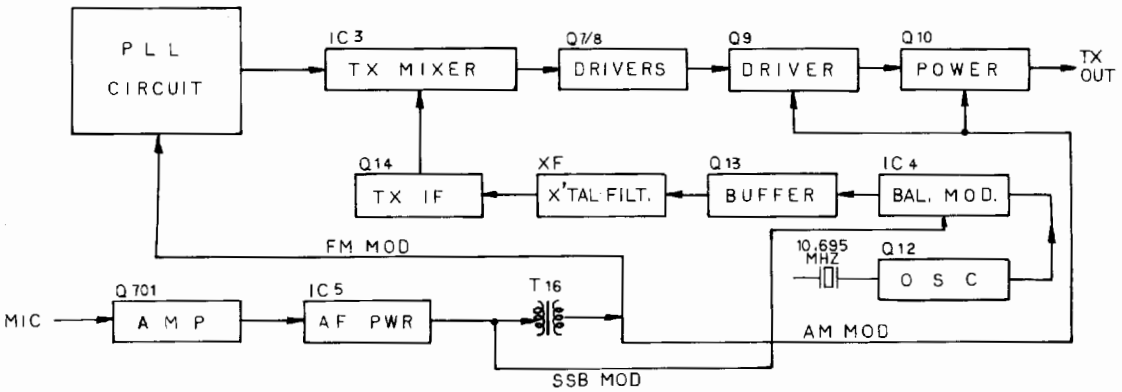

Modulation Circuit

AM: The microphone feeds voice audio through Q701 on PTSW072 to the power audio IC IC5, and finally to collectors of Q9 and final RF power amplifier Q10 through T16, thereby amplitude modulating the carrier in AM transmission.

FM: In the FM mode, IC5 output is led to the anode of the FM modulating variable capacitor D5 (also involved for 'Tune' control) in circuit board assembly PTOS006, varying its bias to change parallel capacitance to X2, X3, or X4, finally giving deviation to PLL output frequency.

SSB: The IC5 output is directly fed to the balanced modulator IC4, resulting in suppressed carrier double side band, which is in turn supplied to the crystal filter to carrier removal.

ALC: An audio ALC [automatic level control] voltage derived from the audio signal at Q35 is fed to IC5 to control the output of audio amplifier to prevent overmodulation. In the AM or FM transmission, the output of Q35 is led to Q37 and is used to control the output of T16, whereas in the SSB transmit mode, the output of Q35 is fed to Q38 and is connected to the primary side of T16. This being due to the fact that the output of IC5 [modulation signal] is fed [to modulate the RF signal] from the secondary side of T16 in the AM or FM mode, and from the primary side of T16 in the SSB mode of transmission.

The transceiver is also equipped with the RF ALC circuit utilizing the RF output induced at the input of L12 [in the SSB mode only]. The minus voltage detected through D8 is applied to the DC

plus bias circuit [pin number 7 of IC3, TX mixer] thus reducing the gain of the TX mixer as high level RF signal is observed at L12. This circuit is disabled in the AM or FM mode of transmission. In summary, the ALC circuit [both audio and RF] accomplishes very important function, not only preventing overmodulation, but in the view of harmonic and spuirous suppression [especially in the SSB transmit mode].

Antenna Transmission Line

The lowpass filter between the antenna and collector of Q10 serves to pass the 27 MHz signals, attenuating higher frequency signals. It also acts to match the antenna impedance to the output impedance of the transmitter output stage, this nominally being 50 Ohm.

Receiver

The RF signal, at a frequency between 26.965 to 28.305 MHz, feeds from the antenna through L13, 12, 11, and T7 to the 27 MHz RF amplifier Q20. Then the amplified output signal from Q20 is coupled through T9 to first mixer Q22 where it is beat with an injection signal from the VCO, IC2, through the VCO buffer Q2.

The frequency of the injection signal from IC2 depends on the channel being selected, as a signal of the 37 MHz range is programmed by the Channel Selector. The output of Q22 is therefore, 10.695 MHz in the AM/FM/USB modes, and 10.692 MHz in the LSB mode, the first intermediate frequency and is the result of the RF input and mixing of IC2 VCO signals.

In case of the AM or FM receive mode, this 10.695 MHz first IF signal is then fed to the second mixer, balanced D22 and D23. Also fed to the second mixer is the second local oscillator signal, 10.24 MHz, from Q3. Mixing of these two signals result in a signal at a frequency of 455 kHz in T14. This is the second intermediate frequency for AM or FM mode of reception. In AM mode, the 455 kHz signal passes through the ceramic bandpass filter CF, and fed to IF amplifiers Q27, 28, and 29, which include IF transformer T15. The output of Q29 is applied to D25, the AM diode detector, while in FM receiving mode, the 455 kHz signal amplified only through Q27 is led to FM demodulating IC, IC3 on the PTOS006 through T4. Resultant demodulated audio is acheived from the IC pin #12 and input to AF gain control VR, VR1. In the SSB mode of reception, the signal obtained as a result of the mixing of the RF input and IC2 VCO signals, 10.695 MHz in the USB, and 10.692 MHz in the LSB mode, is not converted down to lower intermediate frequency, but is passed through the crystal filter, XF, and fed to the SSB IF amplifiers, Q14, 16, and 17, which includes T11, and 12. The signal at the secondary side of T12 is fed to Q19, the product SSB detector and beat with the BFO [beat frequency oscillator] signal from the Q12 and finally rectified to audio frequency signal.

The audio signal output from detectors (for AM [D25], FM [IC2], and SSB [Q19]), is passed through the AF Gain Control, VR1, to the input of the audio amplifier, IC5. The audio output is transformer-coupled to the internal speaker, or to an external speaker through External Speaker jack, J3.

RX Diagram

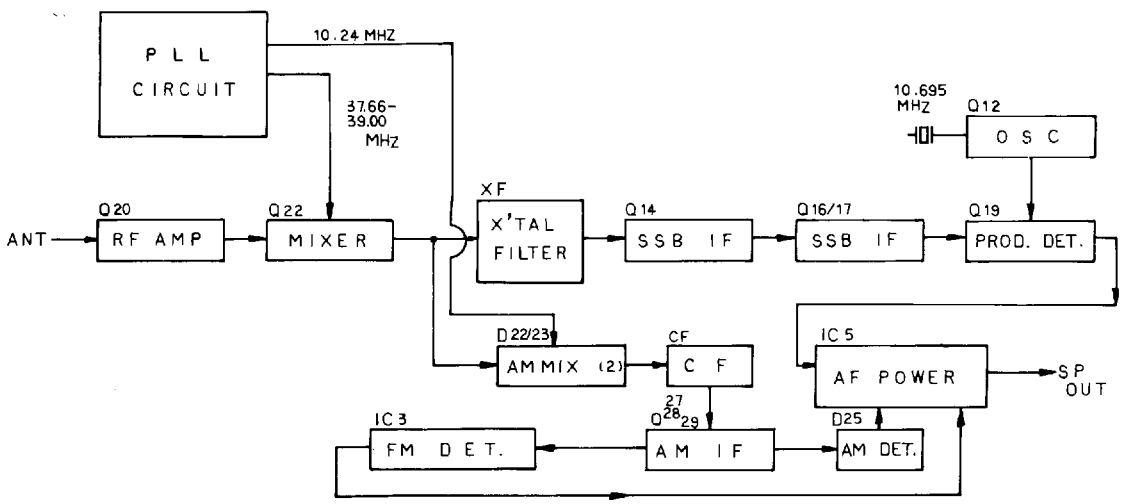

Squelch

Q32, 33, and 34 are the squelch amplifier transistors. At low [or no] signal levels Q34 collector conducts to ground and its output connected to pin number 6 of IC5 results in no signal output from the audio amplifier. As the incoming RF signal increases it results in opening up the AF amplifier and output is activated. The point at which Q34 cuts off is determined by setting of the Squelch Control, VR2.

Noise Blanker
The noises contained in the RF signal at the output of RF amplifier, Q20, is fed through C112 to the base of Q23. The amplified signal output of Q20 is rectified by diodes D20 and 21. The resulting DC voltage turns on Q24 [FET] which in turn turns on Q25 and 26. This causes the IF signal [10.695 or 10.692 MHz] at T10 to be conducted to ground through C121 and Q26 during the presence of the noise impulses, blanking out the noise from the audio output.

'Tune' Circuit (PTOS006)
The 'Tune' control facility allows between-channel operation shifting both the transmit and receive frequencies 4.5 kHz above or below the assigned channel frequency continuously.
The active elements of the circuit are variable-capacitance diodes D4, D5 and VR4. Both diodes capacitances vary in accordance with the bias level determined by VR4 adjustment, thus increasing or decreasing the parallel capacitance to R14 at Q4 emitter through C25 (by D4) and the external capacitance to X1, X2 or X3 (by D5) simultaneously. The bias of both diodes is fixed when VR4 is pulled to *Off*.

Clarifier Circuit
The Clarifier is operative only in receive mode and changes the receive frequency regardless of the transmitting frequency. VR6 acts to vary the plus bias voltage of D206 (on circuit board Y3) in the same way as in Tune circuit description. Thus, Q4 oscillating frequency is pulled above (VR6 clockwise rotated) or down (VR6 counterclockwise rotated) its normal channel frequency. D206 is fixed biased when the unit is transmitting.

High Filter
The high-frequency-cut filter acts to improve readability in congested areas etc., eliminating high frequency noise component in audio output. In PTSW072 circuit board, Q702 serves to compensate CR filter loss.

Power Supply
The supplied 220V AC is stepped down through T201 and rectified by bridge rectifiers D1 to 4 on PTPW007. When the voltage output at pin #3 on the circuit board decreases, the collector current of Q2 also decreases causing reduced collector voltage. This will increase Q1 bias and Q201 bias. The voltage across the collector to emitter of Q201 decreases thus restoring the initial voltage incline.

Adjustment

Test Equipment
The following equipment are required for servicing:
1. A 50 Ohm resistive antenna load, 20W.
2. A frequency counter operable in the required range.
3. A HF signal generator operable over 50 kHz to 60 MHz.
4. An oscilloscope.
5. An FM deviation meter.
6. A digital Voltmeter.
7. An 8 Ohm 5W resistive speaker load.
8. Two audio signal generators, 10 Hz to 20 kHz.
9. An RF Voltmeter.
10. A circuit tester, input impedance 20 kOhm/V.
11. A 220V 50 Hz AC power source.
12. Dummy microphone plug (wired as shown beside applicable set-up).
    To activate the transmitter without using the microphone PTT bar, use the dummy plug. This plug is also used to introduce a modulating audio signal to the microphone input circuit as described in the following procedures.

Precautions
Before performing any adjustment, check visually all jacks, plugs and solder joints for normal connection. Shown in the schematic diagram are nominal tested voltage values for the transistors and ICs. For tune-up and servicing, be sure to use identical parts as listed in the *Replacement Part List.*

Power Supply Alignment
Important: This alignment should be performed first of all items.
1) Connect circuit tester across the terminal #3 (plus) and *G* (minus) on PTPW007.

2) Turn unit on at 220V 50 Hz input.
3) Reading should be 13.8 Volt. If necessary adjust, RV1.

Transmitter Alignment

Connect testing equipment to the unit as shown:

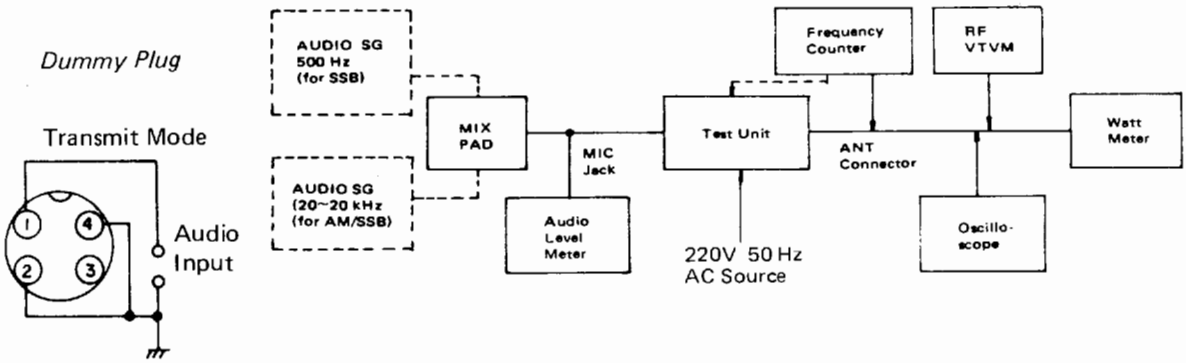

PLL Aligment (PTOS006)

1) Connect frequency counter to TP1 (or IC1 pin #3) through 1,000 pF capacitor.
2) Adjust CT1 for 10.240 MHz. Tolerance within ±50 Hz is acceptable.

Off-Set Frequency Alignment (PTOS006, unless otherwise noted)

1) Connect frequency counter to TP4, with maximum level range.
2) Set the Mode selector to *USB*.
3) Set the Band selector to *Lo*.
4) Adjust CT2 for 20.105 MHz ±40 Hz.
5) Set the Band selector to *Mid*.
6) Adjust CT3 for 20.330 MHz ±40 Hz.
7) Set the Band selector to *Hi*.
8) Adjust CT4 for 20.555 MHz ±40 Hz.
9) Set the Band selector to *Mid*, the Channel selector to 60.
10) Connect scope to TP4.
11) Adjust T1 for maximum scope amplitude.
12) Connect frequency to TP5 (PTBM058).
13) Adjust CT5 (PTBM059) for 10.695 MHz ±50 Hz.

LSB Off-Set Alignment

1) Set the Mode selector to LSB, the Band selector to *Lo*.
2) Connect frequency counter to TP4 (PTOS006).
3) Adjust CT5 (PTOS006) for 20.1035 MHz ±40 Hz.
4) Connect frequency counter to TP5 (PTBM059).
5) Adjust CT4 for 10.692 MHz ±50 Hz.

VCO Alignment

1) Set the Band selector to *Lo* and the Channel selector to 1.
2) Connect digital Voltmeter between TP2 and ground.
3) Adjust VCO block core to obtain 3.6V ± 0.1V.
4) Set the Channel selector to 41, and the Band selector to *Mid*.
5) Adjust VR1 for 3.7V ± 0.1V.
6) Set the Channel selector to 1, and the Band selector to *Hi* (81 channel0.
7) Adjust VR2 for 3.8V ± 0.1V.

RF Power Amplifier Alignment (PTBM058, unless otherwise noted)

1) Set the Band selector to *Lo* and the Channel selector to 1.
2) Set the Mode switch to USB.
3) Feed 2,400 Hz 10 mV audio to unit.
4) Adjust T3 (PTOS006) and T5 (PTBM058) for maximum scope display.
5) Set the Band selector to *Hi* and the Channel selector to 40 (120 channel).
6) Adjust T2 (PTOS006) and T4 (PTBM058) for maximum scope display.

RF Driver Alignment (PTBM058)

1) Set the Channel selector to 60 with the Band selector set to *Mid*.
2) Feed 2,400 Hz 10 mV audio to unit.
3) Adjust T6, L11, L12 and L13 for maximum output on RF Wattmeter.
4) Remove testing audio.
5) Adjust RV4 and RV5 for minimum carrier leakage on scope.

Two-Tone Alignment (Refer to next page diagram)

1) Feed 500 Hz and 2,400 Hz audio tones to the mic circuit simultaneously. Use two audio signal generator sets.
2) Adjust both testing audio levels by means of attenuators on the generators, so that the scope presents wave figure like shown as 'A' of diagram next page.
3) Adjust RV11 to obtain 12W PEP power output.

AM/FM RF Power Alignment

1) Set Mode switch to AM, TX mode, channel 60.
2) Set RF Power switch to 0.5W.
3) Adjust RV9 to 0.5W on Wattmeter.
4) Set RF Power switch to 4W.
5) Adjust RV8 to 4W on Wattmeter.

AM Modulation Alignment

1) Apply 2,400 Hz 7 mV audio to the unit microphone input.
2) Adjust RV12 for modulation depth of 80%.
3) Increase audio level to 70 mV.
4) Check modulation depth increases to 90%.

FM Modulation Alignment

1) Set the Mode switch to *FM* position.
2) Apply 2,400 Hz 10 mV audio to modulation circuit. Use dummy mic plug.
3) Connect deviation meter to antenna output on the unit.
4) Adjust RV3 (PTOS006) to obtain 1.5 kHz deviation.

RF Power Meter Alignment

1) Set the unit to *AM* mode.
2) Comparing the external RF power meter and the one built-in the unit, adjust RV3 (PTBM059) for equal indication on the unit power meter.

Transmitting Frequency Check

Verify that the frequency counter indicates channel frequencies tabulated in the *Frequency Table* with tolerance within ±800 Hz.

Receiver Alignment

Connect testing equipment as shown:

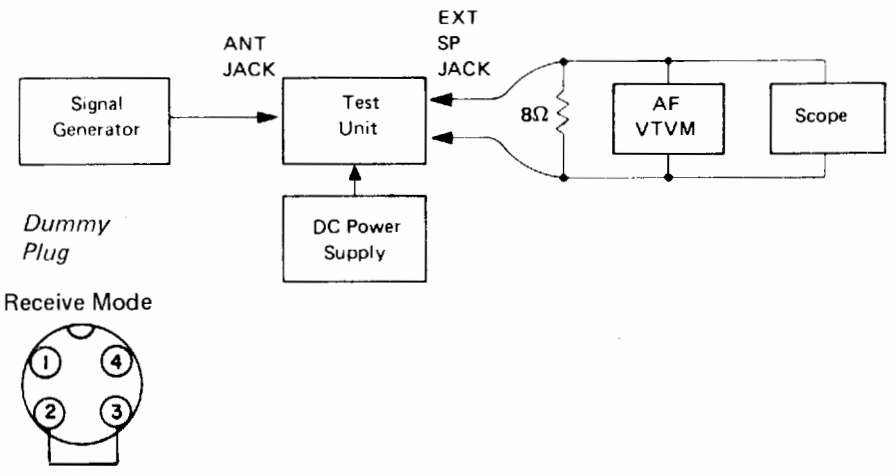

AGC Alignment

1) Connect digital Voltmeter to circuit board PTBM059 terminal 15 (Q20, Q22 AGC input) and chassis ground.
2) Set the transceiver to channel 60.
3) Rotate the RF Gain control fully clockwise.
4) Adjust RV8 for 2V reading.

AM Receiver Sensitivity

1) Set the signal generator to 27.655 MHz with 1 kHz 30% modulation.
2) Set the transceiver tuned to channel 60.
3) Set the Mode selector to AM position.
4) Adjust T7, T8, T9, T10, T13, T14 and T15 fot maximum audio output across speaker dymmy resistor.
   Note: Keep generator output as low as possible to avoid AGC action through this alignment.
5) After completing above procedure, rotate T7 to decrease the audio output by 2 dB.

Squelch Alignment

1) Set the Mode selector to AM position.
2) Set the signal generator to provide RF input signal of 300 μV 1 kHz 30% modulated and rotate the Squelch control to the fully clockwise position.
3) Adjust RV9 so that the audio appears on scope.

S-Meter Alignment

1) Set the Mode switch to AM position.
2) Select channel 60 (Mid band).
3) Set the signal generator to provide 100 μV (40 dB) output.
4) Adjust RV7 so that the S-meter pointer indicates '9'.

A. Properly adjusted transmitter.

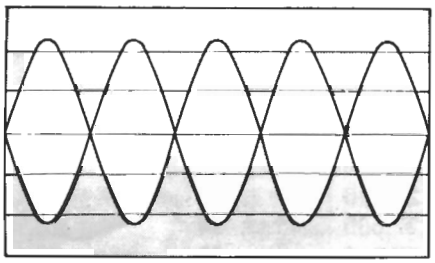

B. Unequal tones — Adjust generator outputs to balance.

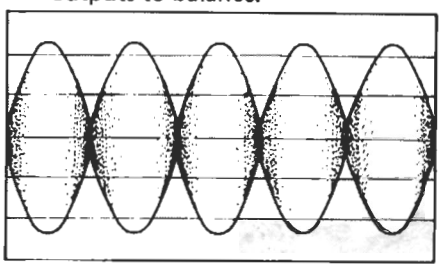

C. Excessive modulation — Adjust RV11 counterclockwise.

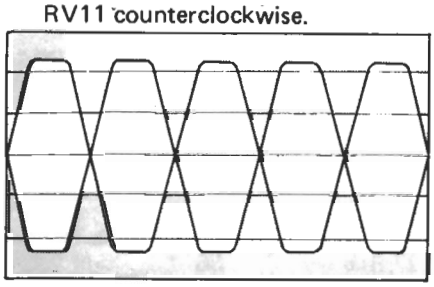

D. Final transistor incorrectly biased — Adjust VR1.

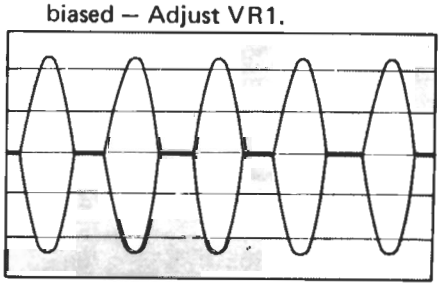

E. Undermodulation — Adjust RV11 clockwise.

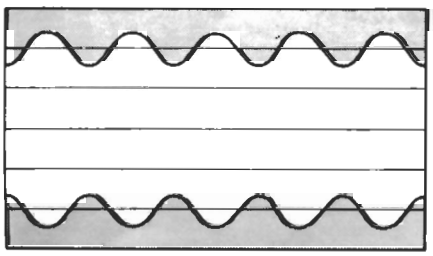

F. Similar to A but showing hum — Check for proper testing condition.

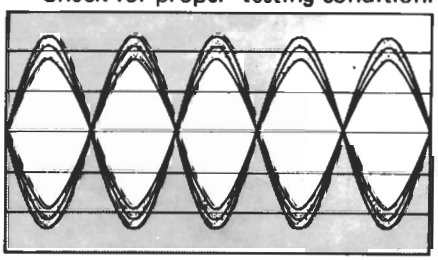

Frequency Table

LOW CHANNEL	CHANNEL FREQUENCY IN MHZ	MID CHANNEL	CHANNEL FREQUENCY IN MHZ	HIGH CHANNEL	CHANNEL FREQUENCY IN MHZ
1	26.965	41	27.415	1	27.865
2	26.975	42	27.425	2	27.875
3	26.985	43	27.435	3	27.885
4	27.005	44	27.455	4	27.905
5	27.015	45	27.465	5	27.915
6	27.025	46	27.475	6	27.925
7	27.035	47	27.485	7	27.935
8	27.055	48	27.505	8	27.955
9	27.065	49	27.515	9	27.965
10	27.075	50	27.525	10	27.975
11	27.085	51	27.535	11	27.985
12	27.105	52	27.555	12	28.005
13	27.115	53	27.565	13	28.015
14	27.125	54	27.575	14	28.025
15	27.135	55	27.585	15	28.035
16	27.155	56	27.605	16	28.055
17	27.165	57	27.615	17	28.065
18	27.175	58	27.625	18	28.075
19	27.185	59	27.635	19	28.085
20	27.205	60	27.655	20	28.105
21	27.215	61	27.665	21	28.115
22	27.225	62	27.675	22	28.125
23	27.255	63	27.705	23	28.155
24	27.235	64	27.685	24	28.135
25	27.245	65	27.695	25	28.145
26	27.265	66	27.715	26	28.165
27	27.275	67	27.725	27	28.175
28	27.285	68	27.735	28	28.185
29	27.295	69	27.745	29	28.195
30	27.305	70	27.755	30	28.205
31	27.315	71	27.765	31	28.215
32	27.325	72	27.775	32	28.225
33	27.335	73	27.785	33	28.235
34	27.345	74	27.795	34	28.245
35	27.355	75	27.805	35	28.255
36	27.365	76	27.815	36	28.265
37	27.375	77	27.825	37	28.275
38	27.385	78	27.835	38	28.285
39	27.395	79	27.845	39	28.295
40	27.405	80	27.855	40	28.305

PC
Boards

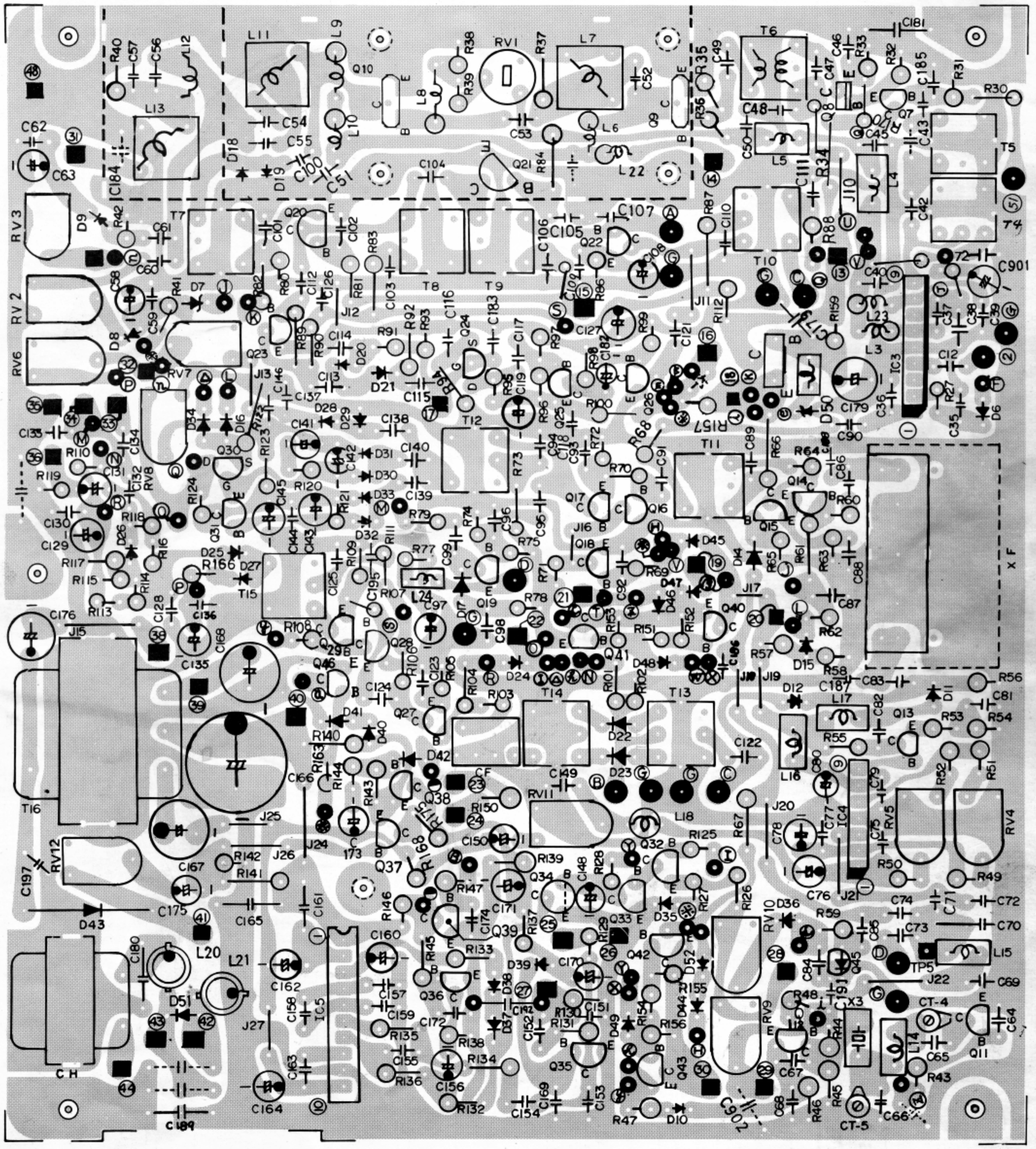

PTBM059COX

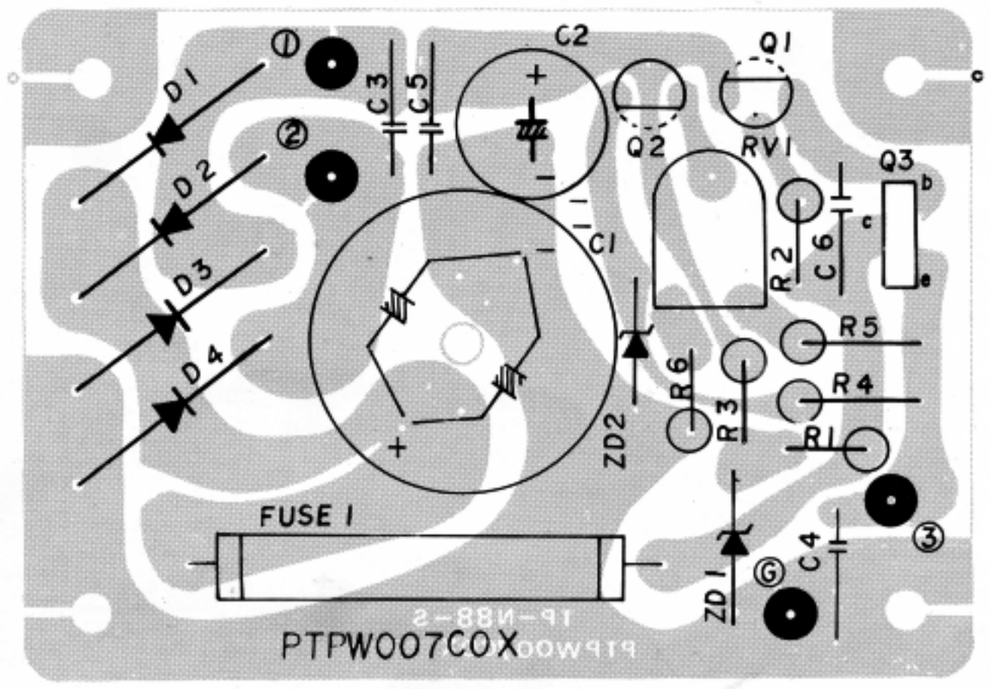

PTPW007COX

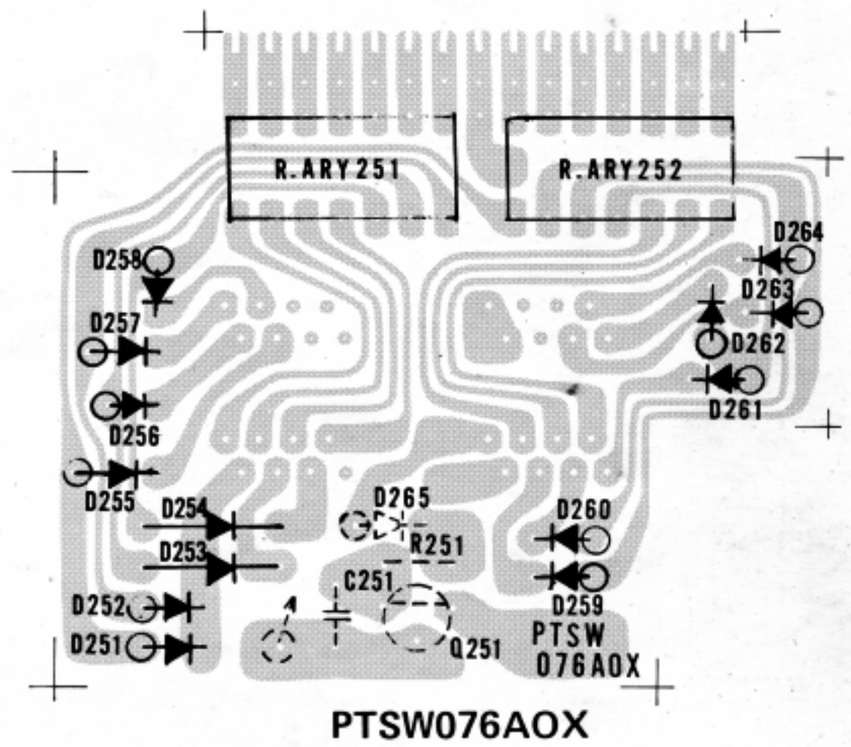

PTSW076AOX

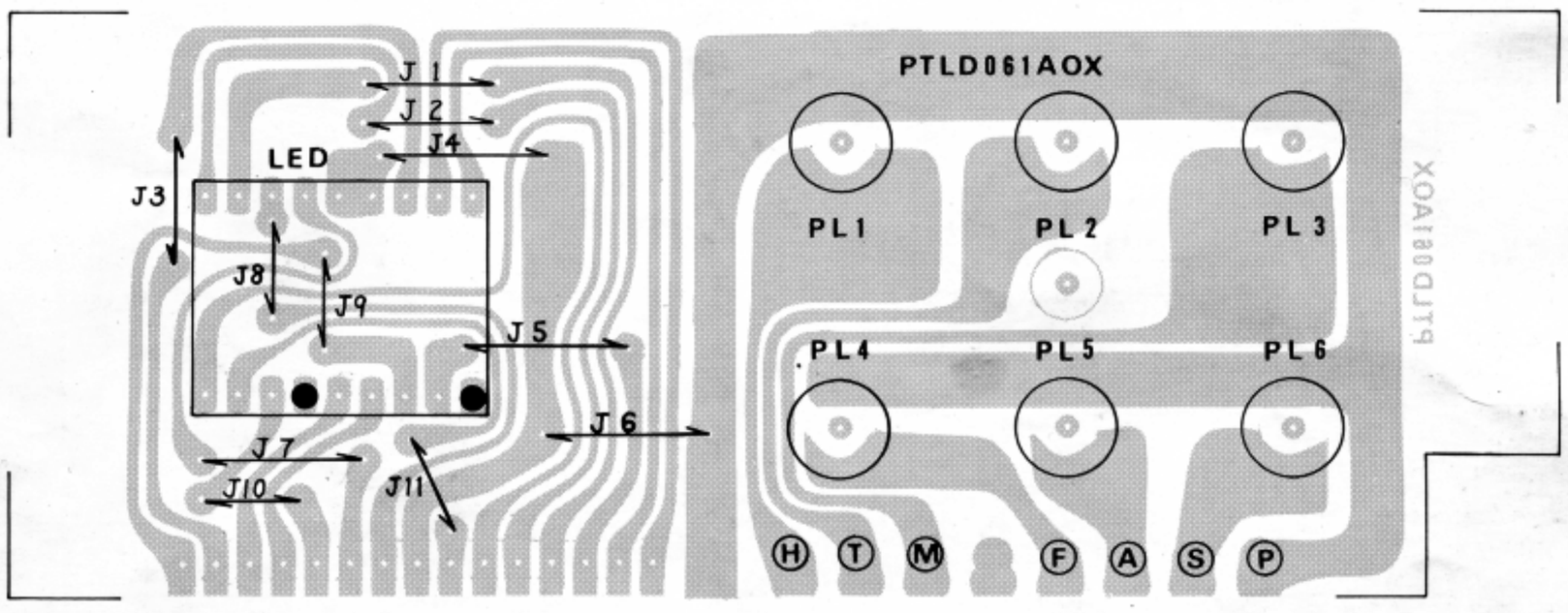

PTLD061AOX

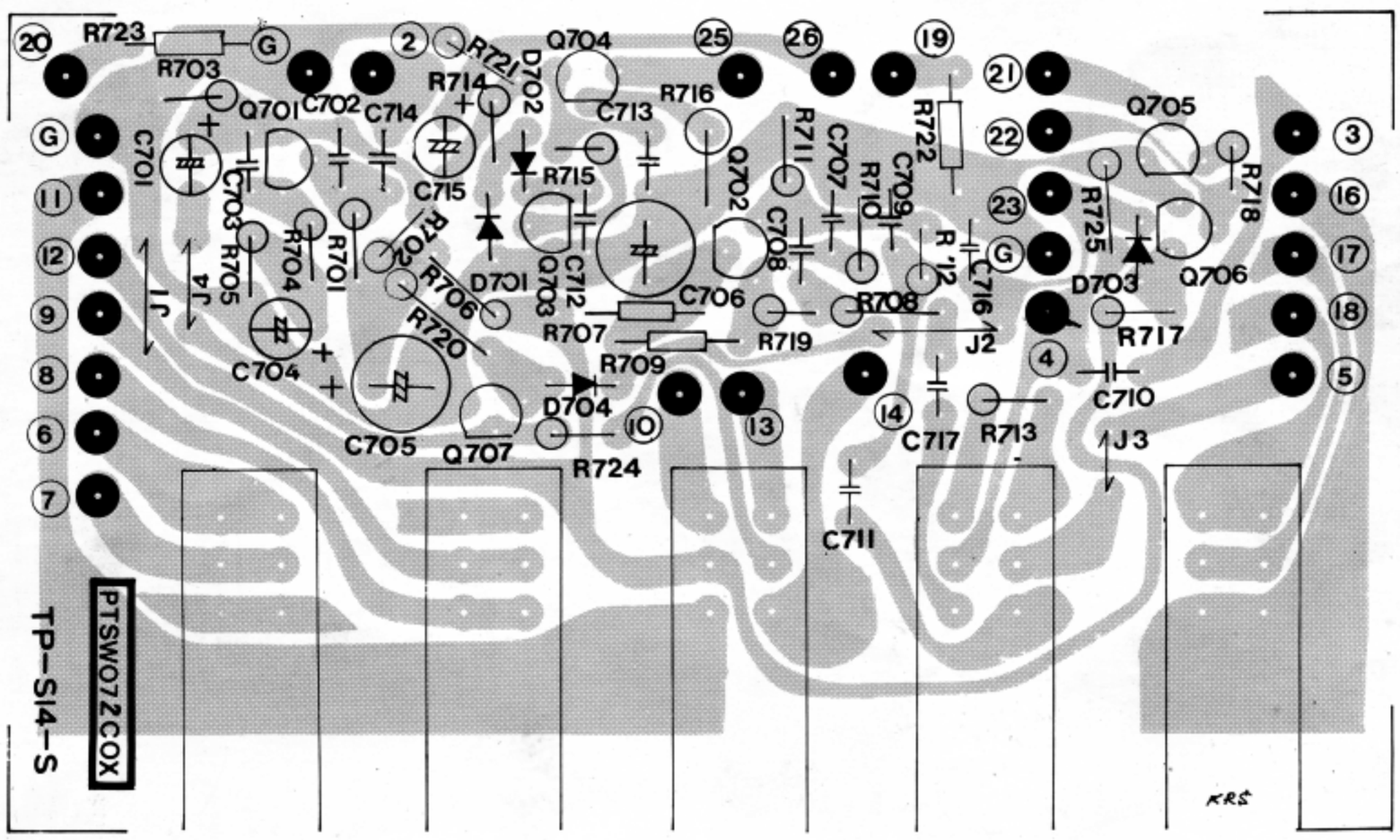

PTSW072COX

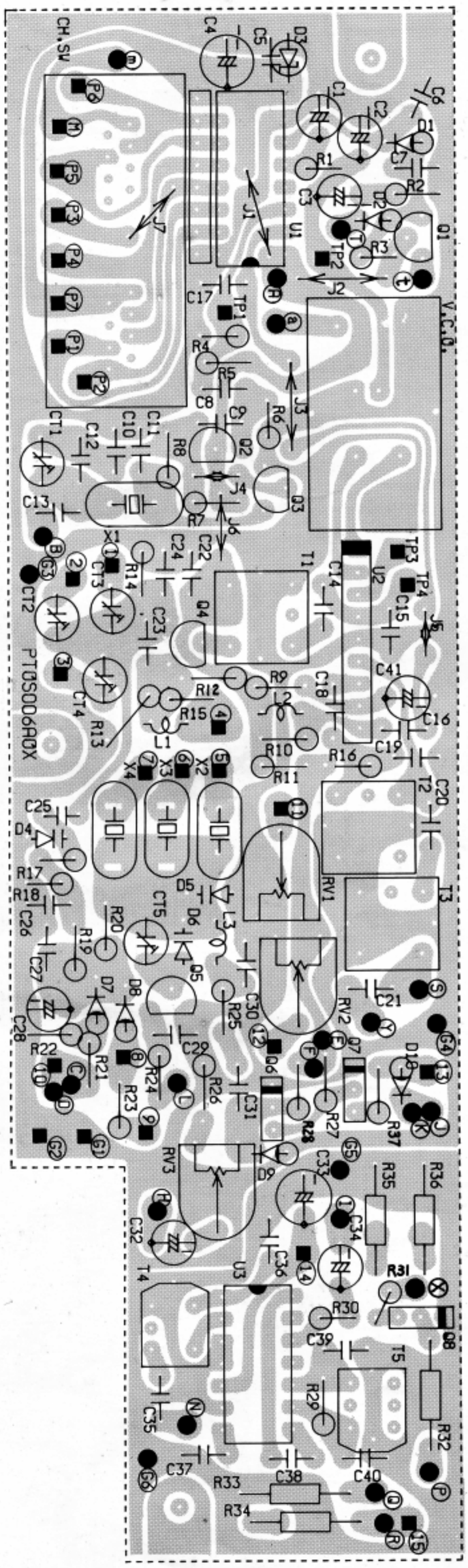

PTOS006AOX

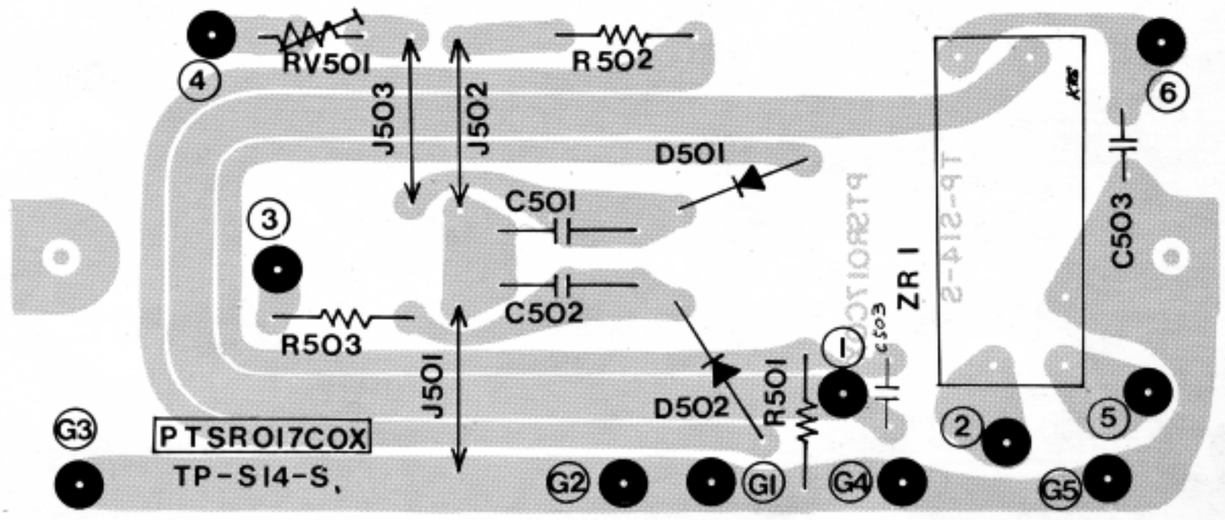

PTSR017COX

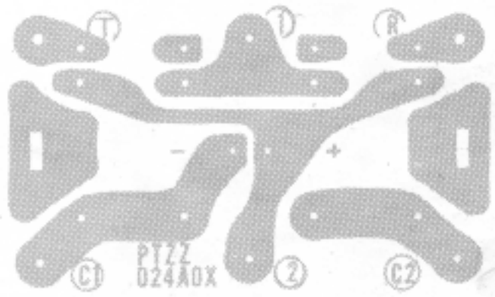

PTZZ024AOX

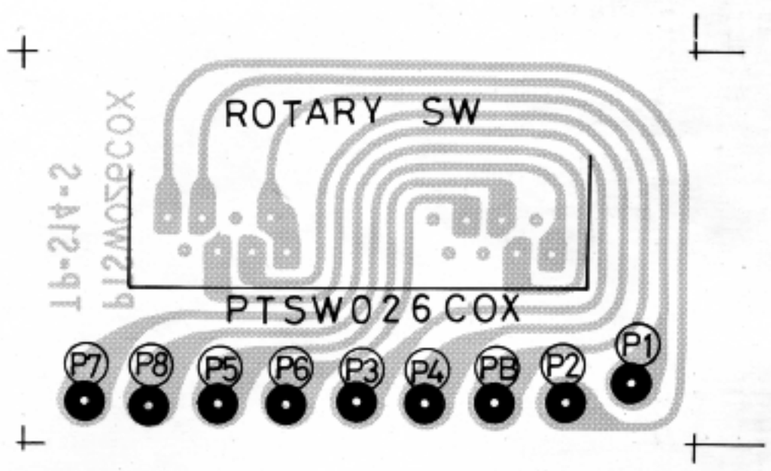

PTSW026COX

Schematic Diagram

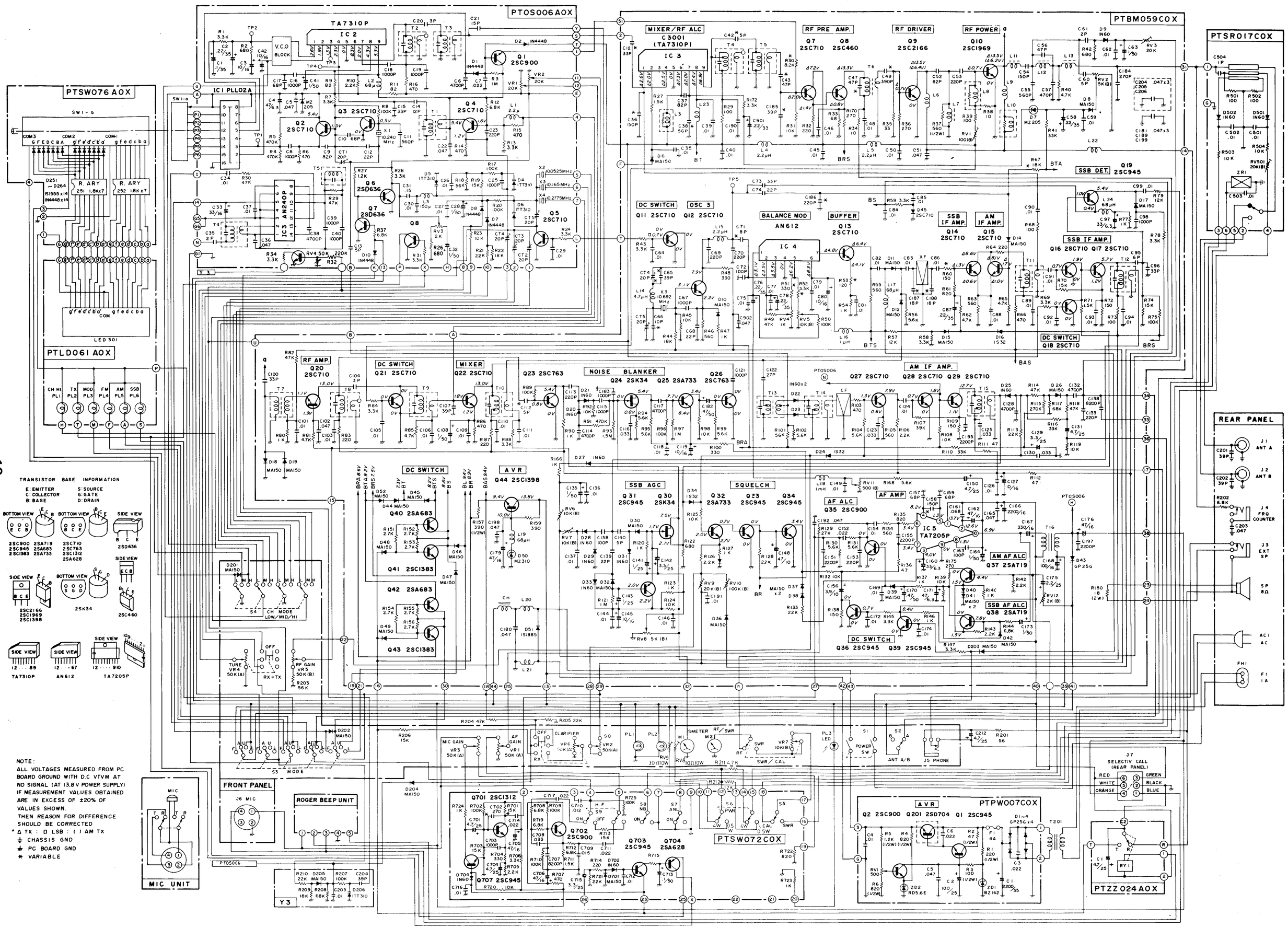

Replacement Part List

PART NAME	PART CODE
ELEC. ELEMENTS	SRA35AESHL1

PART CODE	STOCK NUMBER	PART NAME	SPECIFICATIONS	SYMBOLIC OR EXPLODED VIEW NO.				QTY USED
ACAC041EEA		AC CORD ASSY.		AC1				1
ACCN038GEA		CONN CORD ASSY.		J7				1
ARTRM059CA		P.W.BOARD ASSY.						1
ARTLD061AA		P.W.BOARD ASSY.						1
ARTRW007EA		P.W.BOARD ASSY.						1
ARTSR017RA		P.W.BOARD ASSY.						1
ARTSW026QA		P.W.BOARD ASSY.						1
ARTSW072BA		P.W.BOARD ASSY.						1
ARTSW076AA		P.W.BOARD ASSY.						1
ARTZZ8GRR1		P.W.BOARD ASSY.						1
ARTZZ0248A		P.W.BOARD ASSY.						1
ARTOSC046CA		P.W.BOARD ASSY.						1
CCDB392CRM		CERAMIC CAP.	39PF 50V -10, +10% PH	C201	C202	C204		3
CEAE4R7A1X		ELYT. CAPACITOR	4.7MFD 25V	C212				1
CKDB103RFM		CERAMIC CAP.	0.01MFD 50V -0, +100% F	C205				1
CKDB473ZFM		CERAMIC CAP.	0.047MFD 50V -20, +20% F	C203				1
GJUM80-A03		WIRE KIT						1
DDCIT310X0		VARI-CAP. DIODE	1TT310 12V NO-RANK 26MIN	D206				1
DDSM150XN		SILICON DIODE	MA150 VF=1.2V,VR=35V NO-RANK 24MIN	D201	D202	D203	D204	5
				D205				
DLA0313DSR		L.E.D.	GD4-209RD RED 1.7V	PL3				1
DTD0704XAF		TRANSISTOR	2SD704 D,E-RANK	Q201				1
RD25TJ104X		CARBON FILM R.	0.25W 100K OHM 5%	R207				1

PART NAME	PART CODE
ELEC. ELEMENTS	SRA35AESHL1

PART CODE	STOCK NUMBER	PART NAME	SPECIFICATIONS	SYMBOLIC OR EXPLODED VIEW NO.				QTY USED
RD25TJ153X		CARBON FILM R.	0.25W 15K OHM 5%	R206				1
RD25TJ183X		CARBON FILM R.	0.25W 18K OHM 5%	R209				1
RD25TJ223X		CARBON FILM R.	0.25W 22K OHM 5%	R205	R210			2
RD25TJ473X		CARBON FILM R.	0.25W 47K OHM 5%	R204				1
RD25TJ562X		CARBON FILM R.	0.25W 5.6K OHM 5%	R202				1
RD25TJ563X		CARBON FILM R.	0.25W 56K OHM 5%	R203				1
RD25TJ683X		CARBON FILM R.	0.25W 68K OHM 5%	R208				1
RG1AMJ560B		M-OXIDE FILM R.	1W 56 OHM 5%	R201				1
RVNA502A06		VR.		VR3				1
RVJA503A13		VR.		VR1	VR2			2
RVNA503B13		VR.		VR5				1
RVNC103B02		VR.		VR7				1
RVMZ503A02		V.R.		VR4	VR6			2
RAVA260B02		VR.	6 OHM A-CURVE	VR8				1
SLD2020ICA		LEVER SWITCH		S1				1
SRD402102H		ROTARY SWITCH		S2				1
SRD403107H		ROTARY SWITCH		S4				1
SRD604207H		ROTARY SW		S3				1
TPJ74E001Y		PWR.TRANSFORMER		T201				1
XVM270NB005		BUSHING		ACB1				1
XHF1S20010		FUSE HOLDER						1
YJC02S015Z		ANT JAK		J1	J2			2
YJS03S019Z		PHONE JACK		J5				1

PART NAME	PART CODE
ELEC. ELEMENTS	SBA35AESHL1

PART CODE	STOCK NUMBER	PART NAME	SPECIFICATIONS	SYMBOLIC OR EXPLODED VIEW NO.				Q'TY USED
YJT03S003Z		3P JACK		J3	J4			2
YJ7045004Z		MIC JACK		J5				1
YLL03BXXZS		LUG TERMINAL		Y1	Y2			2
YLL05CXXZX		LUG TERMINAL		Y3				1
YPF02S001Z		PLUG		P1				1
YS2020001U		LED SOKET						1
ZF3010201A		FUSE						1
ZMJ1050N01		METER 18810L		M1				1
ZMJ1050N08		METER 18D38L		M2				1
ZPA1681002U		LAMP		PL1	PL2			2
ZPA0920802*		SPEAKER		SP				1
RWVA300B01		VR	30-ohm, 10W	VR9				
RD25TJ472X		RESISTOR, CARBON	4.7k 1/4W	R211				
RD25TJ123X		RESISTOR, CARBON	12k 1/4W	R212				

PART NAME	PART CODE
MECH. ELEMENTS	SBA35AGSHL2

PART CODE	STOCK NUMBER	PART NAME	SPECIFICATIONS	SYMBOLIC OR EXPLODED VIEW NO.				Q'TY USED
AMJUMBO*02		ESCUTCHEON ASSY		1				1
BSP2606NN		BIND HEAD SCREW	(+)BIT, M2.6 X 4 S-NI	B18-1	B18-2			2
BSP3006NN		BIND HEAD SCREW	(+)BIT, M3 X 6 S-NI	B17-1	B17-2	B33		3
BSP3008NN		BIND HEAD SCREW	(+)BIT, M3 X 8 S-NI	B38				1
BSP5012NB		BIND HEAD SCREW	(+)BIT, M5 X 10 S-BLACK	B19-1	B19-2	B19-3	B19-4	8
				B40-1	B40-2	B40-3	B40-4	
BSP3006NZ		CEMS SCREW	(+)BIT, M3 X 6 S-ZNCR	B16-1	B16-2	B16-3	B16-4	9
				B16-5	B16-6	B16-7	B16-8	
				B16-9				
BSP3006NB		BIND NAIL SCREW	(+)BIT, M3 X 6 S-BLACK	B27-1	B27-2	B27-3	B28-1	5
				B28-2				
BSP3006NT		PAN HEAD SCREW	(+)BIT, M3 X 6 PLASTIC	B30-1	B30-2	B30-3	B30-4	5
				B30-5				
BSP3005NN		FLAT HEAD SCREW	(+)BIT, M3 X 5 S-NI	B26-1	B26-2	B26-3		3
BSP5012NB		FLAT HEAD SCREW	(+)BIT, M5 X 12 S-BLACK	B41-1	B41-2	B41-3	B41-4	4
BTP4008TZ		BIND TAP SCREW	(+)BIT, M4 X 8 S-ZNCR (TAP TITE)	B20-1	B20-2	B20-3	B20-4	8
				B21-1	B21-2	B21-3	B21-4	
BTPL3008BB		NAIL TAP SCREW	(+)BIT, M3 X 8 S-BLACK	B25-1	B25-2	B25-3	B25-4	4
BTPP3045BZ		PAN TAP SCREW	(+)BIT, M3 X 45 S-ZNCR	B29-1	B29-2			2
BTPW3008BB		BRAS. TAP SCREW	(+)BIT, M3 X 8 S-BLACK	B15-1	B15-2			2
BTPW3008BJ		BRAS. TAP SCREW		B13-1	B13-2	B13-3	B13-4	5
				B14				
BTPW3008BZ		BRAS. TAP SCREW	(+)BIT, M3 X 8 S-ZNCR	B1-1	B1-2	B1-3	B1-4	47

PART NAME	PART CODE
MECH. ELEMENTS	SA435AESHL2

PART CODE	STOCK NUMBER	PART NAME	SPECIFICATIONS	SYMBOLIC OR EXPLODED VIEW NO.				QTY USED
				B10	B11-1	B11-2	B11-3	
				B11-4	B11-5	B11-6	B11-7	
				B11-8	B2-1	B2-2	B2-3	
				B2-4	B2-5	B2-6	B2-7	
				B2-8	B3-1	B3-2	B34	
				B35-1	B35-2	B35-3	B35-4	
				B36	B37-1	B37-2	B4-1	
				B4-2	B5-1	B5-2	B5-3	
				B5-4	B5-5	B5-6	B6-1	
				B6-2	B6-3	B6-4	B7	
				B8	B9-1	B9-2		
BTPW301487		BRAS. TAP SCREW	(+)BIT, M3 X 14 S-ZNCR	B12-1	B12-2	B12-3	B12-4	4
BTPX320887		T.T BT SCREW	(+)BIT, M3 X 8 S-ZNCR	B22-1	B22-2	B22-3	B22-4	13
				B22-5	B23-1	B23-2	B23-3	
				B23-4	B24-1	B24-2	B39-1	
				B39-2				
WA320857		FLAT L. WASHER	FLAT LARGE, 3 M/M S-ZNCR	B31-1	B31-2	B31-3	B31-4	4
WA450859		FLAT L. WASHER	FLAT LARGE, 5 M/M S-BLACK	B32-1	B32-2	B32-3	B32-4	8
				B42-1	B42-2	B42-3	B42-4	
XB374SZ003		FRONT PANEL		5				1
XB382SZ001		CHASSIS		2				1
XB472SE398		REAR PANEL		6				1
XC241SN001		BRACKET		11				1

PART NAME	PART CODE
MECH. ELEMENTS	SA435AESHL2

PART CODE	STOCK NUMBER	PART NAME	SPECIFICATIONS	SYMBOLIC OR EXPLODED VIEW NO.				QTY USED
XC471SZ002		BRACKET		36-1	36-2			2
XE362SE003		ESCUTCHEON		8				1
XL121SZ014		BRACKET		19-1	19-2	19-3	19-4	4
XL122SZ011		L ANGLE		39				1
XL622BN001		TERMINAL		18				1
XL744SA001		BRACKET		42-1	42-2			2
XN276SA110		KNOB VR		13-1	13-10	13-2	13-3	10
				13-4	13-5	13-6	13-7	
				13-8	13-9			
XN385SA010		TUNER KNOB		12				1
XS122SZ001		BRACKET		40-1	40-2			2
XS385SZ341		BOTTM PLATE		10				1
MT213BD015		SUPPORT		15				1
XU274SN001		HANDLE		41-1	41-2			2
XU351SZ002		BRACKET L		3				1
XU351SZ003		BRACKET R		4				1
XU654SU002		HEAT SINK		17				1
XU462SZ003		BRACKET		7				1
XU397SB010		COVER		9				1
XX615SZ002		CLAMPER		33-1	33-2	33-3		3
XB532SW001		LAMP HOUSE		21-1	21-2			2
VE164SN003		BUSHING		38				1
VE176SN002		WASHER		31-1	31-2			2

PART NAME	PART CODE
MECH. ELEMENTS	SBA35AESHL2

PART CODE	STOCK NUMBER	PART NAME	SPECIFICATIONS	SYMBOLIC OR EXPLODED VIEW NO.				Q'TY USED
VK164AX002		INDICATOR		43				1
VK164BX001		LAMP GUIDE		22				1
VM165BX003		HOLDER		20-1	20-2			2
VM285S3001		FOOT		15-1	15-2	16-3	16-4	4
VN210SB006		KNOB		14-1	14-2	14-3	14-4	6
				14-5	14-6			
VS223BH002		SILICON SHEET		37				1
VS225BB001		SHEET		29-1	29-2	29-3	29-4	4
VS423YH002		SHEET		30-1	30-2	30-3	30-4	6
				30-5	30-6			
VS605EB001		BARRIER		32-1	32-2			2
VS647AX001		FILTER		23				1
VS665EN001		BARRIER		34				1
VVL311GF27		FUSE LABEL		24				1
VVL631UL03		LABEL		28				1
VVL631UL04		UL. LABEL		27				1
VVSV181N01		SER. NO. PLATE		25				1

PART NAME	PART CODE
ACCESSORIES	SBA35AESHL5

PART CODE	STOCK NUMBER	PART NAME	SPECIFICATIONS	SYMBOLIC OR EXPLODED VIEW NO.				Q'TY USED
BTP04212CN		PAN TAP SCREW	(+)BIT, M4 X 12 S-NI					2
BTDW120CN2		BRAS. TAP SCREW	(+)BIT, M3 X 8 S-ZNCR					2
BWN425ESW		IT. LOCK WASHER	INSIDE TOOTHED, 4 M/M S-ZN					2
XZ331C2002		HOLDER						1
ZZAZ61142		MICROPHONE						1

PART NAME	PART CODE
ESCUTCHEON ASSY	AMJUMB0*01

PART CODE	STOCK NUMBER	PART NAME	SPECIFICATIONS	SYMBOLIC OR EXPLODED VIEW NO.				Q'TY USED
ME97EAA133		ESCUTCHEON		1-A				1
VK132SB004		BUSH		1-D-1	1-D-2	1-D-3	1-D-4	6
				1-D-5	1-D-6			
VK285SM002		FRAME		1-B				1
VS765YB002		SHEET		1-E				1
VS868GC003		PLATE		1-C				1

PART NAME	PART CODE
P.W.BOARD ASSY.	APTBM059CA

PART CODE	STOCK NUMBER	PART NAME	SPECIFICATIONS	SYMBOLIC OR EXPLODED VIEW NO.				Q'TY USED
BNHCL26N8N		NUT	M2.6, BS-NI, THIN-TYPE					2
BSPB3006NN		BIND HEAD SCREW	(+)BIT, M3 X 6 S-NI					7
BSPP3006NT		PAN HEAD SCREW	(+)BIT, M3 X 6 PLASTIC					3
BWU26583SW		IT. LOCK WASHER	INSIDE TOOTHED, 2.6M/M S-ZN					2
BWU30655SW		IT. LOCK WASHER	INSIDE TOOTHED, 3 M/M S-ZN					5
CCCB020CPM		CERAMIC CAP.	PK 2PF 50V -0.25, +0.25PF	C61				1
CCCB030CPM		CERAMIC CAP.	PJ 3PF 50V -0.25, +0.25PF	C104				1
CCCB050CPM		CERAMIC CAP.	PH 5PF 50V -0.25, +0.25PF	C42	C60			2
CCCB050DPM		CERAMIC CAP.	PH 5PF 50V -0.5, +0.5PF	C112	C140			2
CCCB060DPM		CERAMIC CAP.	PH 6PF 50V -0.5, +0.5PF	C95				1
CCCB080DPM		CERAMIC CAP.	PH 8PF 50V -0.5, +0.5PF	C71				1
CCCB100DCM		CERAMIC CAP.	CH 10PF 50V -0.5, +0.5PF	C66				1
CCCB101KPM		CERAMIC CAP.	100PF 50V -10, +10% PH	C138	C72			2
CCCB101KOM		CERAMIC CAP.	100PF 50V -10, +10% SL	C194				1
CCCB151KPM		CERAMIC CAP.	150PF 50V -10, +10% PH	C36	C54			2
CCCB151KOM		CERAMIC CAP.	150PF 50V -10, +10% SL	C155				1
CCCB180KPM		CERAMIC CAP.	18PF 50V -10, +10% PH	C187	C188			2
CCCB220KPM		CERAMIC CAP.	22PF 50V -10, +10% PH	C139	C68	C74		3
CCCB221KPM		CERAMIC CAP.	220PF 50V -10, +10% PH	C113	C186	C53	C69	5
				C70				
CCCB221KOM		CERAMIC CAP.	220PF 50V -10, +10% SL	C133	C153	C163		3
CCCB270KPM		CERAMIC CAP.	27PF 50V -10, +10% PH	C122				1
CCCB271KOM		CERAMIC CAP.	270PF 50V -10, +10% SL	C184				1

PART NAME	PART CODE
P.W.B2A2D ASSY.	AP1BM059CA

PART CODE	STOCK NUMBER	PART NAME	SPECIFICATIONS			SYMBOLIC OR EXPLODED VIEW NO.				QTY USED
CCCB330KPM		CERAMIC CAP.	33PF	50V	-10, +10% PH	C100	C12	C73	C96	4
CCCB390KCM		CERAMIC CAP.	39PF	50V	-10, +10% CH	C65				1
CCCB390KPM		CERAMIC CAP.	39PF	50V	-10, +10% PH	C107	C185			2
CCCB391KCM		CERAMIC CAP.	390PF	50V	-10, +10% SL	C49				1
CCCB470KPM		CERAMIC CAP.	47PF	50V	-10, +10% PH	C43	C47	C56		3
CCCB471KCM		CERAMIC CAP.	470PF	50V	-10, +10% SL	C57				1
CCCB561KCM		CERAMIC CAP.	560PF	50V	-10, +10% SL	C55				1
CCCB680KCM		CERAMIC CAP.	68PF	50V	-10, +10% SL	C157	C159			2
CCCB820KPM		CERAMIC CAP.	82PF	50V	-10, +10% PH	C37	C52			2
CCCB560KPM		CERAMIC CAP.	56PF	50V	-10, +10% PH	C38				1
CEAB330ALX		ELYT. CAPACITOR	33MFD	6.3V		C160	C97			2
CEAB470ALX		ELYT. CAPACITOR	47MFD	6.3V		C171				1
CEAC470ALX		ELYT. CAPACITOR	47MFD	10V		C148				1
CEAD100ALX		ELYT. CAPACITOR	10MFD	16V		C119	C145	C80		3
CEAD101ALX		ELYT. CAPACITOR	100MFD	16V		C168				1
CEAD222ALX		ELYT. CAPACITOR	2200MFD	16V		C166				1
CEAD330ALX		ELYT. CAPACITOR	33MFD	16V		C178				1
CEAD331ALX		ELYT. CAPACITOR	330MFD	16V		C167				1
CEAD470ALX		ELYT. CAPACITOR	47MFD	16V		C162	C176	C179		3
CEAE2R2ALX		ELYT. CAPACITOR	2.2MFD	25V		C175				1
CEAE3R3ALX		ELYT. CAPACITOR	3.3MFD	25V		C129	C142			2
CEAE4R7ALX		ELYT. CAPACITOR	4.7MFD	25V		C131	C150			2
CEAE0R47ALX		ELYT. CAPACITOR	0.47MFD	50V		C170	C182			2

PART NAME	PART CODE
P.W.B2A2D ASSY.	AP1BM059CA

PART CODE	PART. STOCK NUMBER	PART NAME	SPECIFICATIONS			SYMBOLIC OR EXPLODED VIEW NO.				QTY USED
CEAC010ALX		ELYT. CAPACITOR	1MFD	50V		C108	C135	C164	C173	5
						C63				
CCCB222KCM		CERAMIC CAP.	2200PF	50V	-10, +10% B	C197				1
CCCB473ZPM		CERAMIC CAP.	0.047MFD	50V	-20, +80% F	C165	C180	C181	C184	4
CCCB473ZPM		CERAMIC CAP.	0.047MFD	50V	-20, +20% F	C198	C902			2
CQMB102KCH		MYLAR CAPACITOR	1000PF	50V	-10, +10%	C115	C121	C183	C67	5
						C98				
CQMB103KCH		MYLAR CAPACITOR	0.01MFD	50V	-10, +10%	C101	C103	C105	C106	48
						C109	C110	C111	C113	
						C124	C126	C136	C137	
						C144	C146	C149	C154	
						C169	C172	C174	C190	
						C191	C35	C39	C40	
						C45	C46	C48	C50	
						C59	C62	C64	C75	
						C77	C79	C81	C82	
						C83	C84	C85	C86	
						C88	C89	C90	C91	
						C92	C93	C94	C99	
CQMB222KCH		MYLAR CAPACITOR	2200PF	50V	-10, +10%	C151	C155	C195		3
CQMB223KCH		MYLAR CAPACITOR	0.022MFD	50V	-10, +10%	C152				1
CQMB333KCH		MYLAR CAPACITOR	0.033MFD	50V	-10, +10%	C116	C123	C125	C130	4
CQMB472KCH		MYLAR CAPACITOR	4700PF	50V	-10, +10%	C114	C117	C128	C132	4

PART NAME	PART CODE
P.W.BOARD ASSY.	AP TRM059CA

PART CODE	STOCK NUMBER	PART NAME	SPECIFICATIONS	SYMBOLIC OR EXPLODED VIEW NO.				QTY USED
TR10CA006T		RF COIL		T4	T8			2
TR10CB001S		RF COIL		T9				1
TR10CB003T		P.E.T.		T5				1
TR10CB006S		RF COIL		T6				1
TR10CZ003S		RF COIL		L7				1
TR10CZ004S		RF COIL		L13				1
TR10CZ005S		RF COIL		L11				1
TR10LA001S		IFT		T14				1
TR10LA002S		IFT		T15				1
TR10MA013S		IFT		T10				1
TR10MA014S		IFT		T13				1
TR10MA015S		IFT		T11	T12			2
TR10RB003T		RF COIL		T7				1
WK111SC001		SPACER						1
WS223HA002		SILICON SHEET						2
WS311XX001		BARRIER						1
WD481SZ001		COAXIAL CABLE		3				1
WD481Z0001		COAXIAL CABLE		4				1
WJC113EFXX		HI-WRAP WIRE		33				1
WJC121EFXX		HI-WRAP WIRE		12	22			2
WJC131EFXX		HI-WRAP WIRE		21	30			2
WJC134EFXX		HI-WRAP WIRE		15	36			2
WJC135EFXX		HI-WRAP WIRE		25	32			2

PART NAME	PART CODE
P.W.BOARD ASSY.	AP TRM059CA

PART CODE	STOCK NUMBER	PART NAME	SPECIFICATIONS	SYMBOLIC OR EXPLODED VIEW NO.				QTY USED
WJC312EFXX		HI-WRAP WIRE		8				1
WJC413EFXX		HI-WRAP WIRE		14				1
WJC415EFXX		HI-WRAP WIRE		25				1
WJC511EFXX		HI-WRAP WIRE		23				1
WJC513EFXX		HI-WRAP WIRE		13	31			2
WJC514EFXX		HI-WRAP WIRE		10				1
WJC612EFXX		HI-WRAP WIRE		17	28			2
WJC615EFXX		HI-WRAP WIRE		9				1
WJC701EFXX		HI-WRAP WIRE		42				1
WJC702EFXX		HI-WRAP WIRE		41				1
WJC710EFXX		HI-WRAP WIRE		13	7			2
WJC903EFXX		HI-WRAP WIRE		24				1
WJC915EFXX		HI-WRAP WIRE		11				1
WJ916CEFXX		HI-WRAP WIRE		16				1
WXN034AAAA		STRANDED WIRE		35	37			2
XAZ1A001X		XTAL OSCILLATOR		X3				1

PART NAME	PART CODE
P.W.BOARD ASSY.	APTB4059CA

PART CODE	STOCK NUMBER	PART NAME	SPECIFICATIONS	SYMBOLIC OR EXPLODED VIEW NO.				QTY USED
				D40	D41	D42	D44	
				D45	D46	D47	D48	
				D49	D52	D53	D6	
				D8				
00SS1885XT		SILICON DIODE	1S1185 VRM=100 VFM=1.2 25MIN	D51				1
00ZMZ305CE		ZENER DIODE		D7				1
00ZMZ310XE		ZENER DIODE	MZ310 NO-RANK	D50				1
00MAN612AN		I.C.	AN612 7-PIN BALANCED-MOD.	IC4				1
00MC3001AN		I.C.	AN103 O-RANK C3001-O	IC3				1
00MTA7205BT		I.C.	TA7205AP5.8W AUDIO-POWER-AMP	IC5				1
0TA0683XBN		TRANSISTOR	2SA683 B-RANK	Q40	Q42			2
0TA0719XAN		TRANSISTOR	2SA719 O-RANK	Q37	Q38			2
0TA0733XAA		TRANSISTOR	2SA733 O-RANK	Q25	Q32			2
0TC0460XBB		TRANSISTOR	2SC460 A,B-RANK	Q8				1
0TC0710XAE		TRANSISTOR	2SC710 C-RANK	Q13	Q14	Q15	Q16	10
				Q17	Q20	Q22	Q27	
				Q28	Q45			
0TC0710XBE		TRANSISTOR	2SC710 D-RANK	Q11	Q12	Q18	Q21	6
				Q29	Q7			
0TC0763XAE		TRANSISTOR	2SC763 C,D-RANK	Q23	Q26			2
0TC0900XCA		TRANSISTOR	2SC900 U-RANK	Q35				1
0TC0945AGA		TRANSISTOR	2SC945A Q-RANK	Q19	Q31	Q33	Q34	6
				Q36	Q39			

PART NAME	PART CODE
P.W.BOARD ASSY.	APTB4059CA

PART CODE	STOCK NUMBER	PART NAME	SPECIFICATIONS	SYMBOLIC OR EXPLODED VIEW NO.				QTY USED
0TC1383XDN		TRANSISTOR	2SC1383 R-RANK	Q41	Q43			2
0TC1969XAE		TRANSISTOR	2SC1969 X,D-RANK	Q10				1
0TC2166XAE		TRANSISTOR	2SC2166 NO-RANK	Q9				1
0TD0325XCC		TRANSISTOR	2SD325 D,E-RANK	Q44				1
0TK0034XAE		TRANSISTOR	2SK34 C,D-RANK	Q24				1
0TK0034XBE		TRANSISTOR	2SK34 E-RANK	Q30				1
0025VJ100X		CARBON FILM R.	0.25W 10 OHM 5%	R34	R38			2
0025VJ101X		CARBON FILM R.	0.25W 100 OHM 5%	R29	R39	R68	R73	4
0025VJ102X		CARBON FILM R.	0.25W 1K OHM 5%	R120	R123	R127	R137	12
				R140	R146	R166	R47	
				R54	R77	R80	R90	
0025VJ103X		CARBON FILM R.	0.25W 10K OHM 5%	R108	R119	R124	R125	10
				R132	R139	R31	R45	
				R92	R98			
0025VJ104X		CARBON FILM R.	0.25W 100K OHM 5%	R50	R75	R89	R96	4
0025VJ105X		CARBON FILM R.	0.25W 1M OHM 5%	R121	R97			2
0025VJ121X		CARBON FILM R.	0.25W 120 OHM 5%	R53				1
0025VJ123X		CARBON FILM R.	0.25W 12K OHM 5%	R57	R79			2
0025VJ151X		CARBON FILM R.	0.25W 150 OHM 5%	R109	R138	R60	R72	4
0025VJ152X		CARBON FILM R.	0.25W 1.5K OHM 5%	R27	R71			2
0025VJ153X		CARBON FILM R.	0.25W 15K OHM 5%	R70	R74			2
0025VJ155X		CARBON FILM R.	0.25W 1.5M OHM 5%	R93				1
0025VJ183X		CARBON FILM R.	0.25W 18K OHM 5%	R44	R67			2

PART NAME	PART CODE
P.W.BOARD ASSY.	AP TBM059CA

PART CODE	STOCK NUMBER	PART NAME	SPECIFICATIONS	SYMBOLIC OR EXPLODED VIEW NO.				QTY USED
RD25VJ221X		CARBON FILM R.	0.25W 220 OHM 5%	R32	R64	R83	R87	4
RD25VJ222X		CARBON FILM R.	0.25W 2.2K OHM 5%	R106	R126	R142	R143	4
RD25VJ223X		CARBON FILM R.	0.25W 22K OHM 5%	R113	R128	R133		3
RD25VJ271X		CARBON FILM R.	0.25W 270 OHM 5%	R175	R36			2
RD25VJ272X		CARBON FILM R.	0.25W 2.7K OHM 5%	R151	R152	R153	R154	6
				R155	R156			
RD25VJ273X		CARBON FILM R.	0.25W 27K OHM 5%	R129				1
RD25VJ274X		CARBON FILM R.	0.25W 270K OHM 5%	R115				1
RD25VJ330X		CARBON FILM R.	0.25W 33 OHM 5%	R35				1
RD25VJ331X		CARBON FILM R.	0.25W 330 OHM 5%	R100	R48	R51		3
RD25VJ332X		CARBON FILM R.	0.25W 3.3K OHM 5%	R145	R147	R172	R43	11
				R52	R58	R59	R69	
				R78	R84	R88		
RD25VJ333X		CARBON FILM R.	0.25W 33K OHM 5%	R110	R116	R41		3
RD25VJ391X		CARBON FILM R.	0.25W 390 OHM 5%	R159				1
RD25VJ393X		CARBON FILM R.	0.25W 39K OHM 5%	R107				1
RD25VJ470X		CARBON FILM R.	0.25W 47 OHM 5%	R111	R112	R136		3
RD25VJ471X		CARBON FILM R.	0.25W 470 OHM 5%	R103	R65	R86		3
RD25VJ472X		CARBON FILM R.	0.25W 4.7K OHM 5%	R141	R40	R62	R65	6
				R81	R85			
RD25VJ473X		CARBON FILM R.	0.25W 47K OHM 5%	R114	R118	R49	R82	4
RD25VJ474X		CARBON FILM R.	0.25W 470K OHM 5%	R91				1
RD25VJ561X		CARBON FILM R.	0.25W 560 OHM 5%	R105	R134	R46	R55	5

PART NAME	PART CODE
P.W.BOARD ASSY.	AP TBM059CA

PART CODE	STOCK NUMBER	PART NAME	SPECIFICATIONS	SYMBOLIC OR EXPLODED VIEW NO.				QTY USED
				R63				
RD25VJ562X		CARBON FILM R.	0.25W 5.6K OHM 5%	R102	R104	R130	R131	9
				R168	R56	R94	R95	
				R99				
RD25VJ563X		CARBON FILM R.	0.25W 56K OHM 5%	R101				1
RD25VJ680X		CARBON FILM R.	0.25W 68 OHM 5%	R33				1
RD25VJ681X		CARBON FILM R.	0.25W 680 OHM 5%	R122	R42			2
RD25VJ682X		CARBON FILM R.	0.25W 6.8K OHM 5%	R144				1
RD25VJ683X		CARBON FILM R.	0.25W 68K OHM 5%	R117				1
RD25VJ821X		CARBON FILM R.	0.25W 820 OHM 5%	R135	R61			2
RD25VJ822X		CARBON FILM R.	0.25W 8.2K OHM 5%	R30				1
RGHANJ391B		M-OXIDE FILM R.	1/2W 390 OHM 5%	R157				1
RGHANJ561B		M-OXIDE FILM R.	1/2W 560 OHM 5%	R37				1
RPGN810201		SEMI-FIXED VR.	1K OHM B-CURVE	RV4				1
RPGN810301		SEMI-FIXED VR.	10K OHM B-CURVE	RV5	RV7			2
RPGN820201		SEMI-FIXED VR.	2K OHM B-CURVE	RV12				1
RPGN820301		SEMI-FIXED VR.	20K OHM B-CURVE	RV3	RV6	RV9		3
RPGN820401		SEMI-FIXED VR.	200K OHM B-CURVE	RV10				1
RPGN850101		SEMI-FIXED VR.	500 OHM B-CURVE	RV11				1
RPGN850201		SEMI-FIXED VR.	5K OHM B-CURVE	RV2	RV8			2
RPJN810101		SEMI-FIXED VR.	100 OHM B-CURVE	RV1				1
RX2ANJ180B		M-OXIDE FILM R.	2W 18 OHM 5%	R150				1
TSG298004W		AF OPT		T16				1

PART NAME	PART CODE
P.W.BOARD ASSY.	APTBM059CA

PART CODE	STOCK NUMBER	PART NAME	SPECIFICATIONS	SYMBOLIC OR EXPLODED VIEW NO.				Q'TY USED
CQMB473KCH		MYLAR CAPACITOR	0.047MFD 50V -10, +10%	C102	C192	C51		3
CQMB683KCH		MYLAR CAPACITOR	0.068MFD 50V -10, +10%	C161				1
CQMB822KCH		MYLAR CAPACITOR	8200PF 50V -10, +10%	C134				1
CSSD100MDN		TANTALUM CAP.	10MFD 16V -20, +20%	C127				1
CSSE010MDC		TANTALUM CAP.	1MFD 25V -20, +20%	C141	C143			2
CSSE389MDC		TANTALUM CAP.	3.9MFD 25V -20, +20%	C156				1
CSSE222MDC		TANTALUM CAP.	0.22MFD 35V -20, +20%	C58	C76	C78	C87	5
				C901				
CT7620401		TRIMMER CAP.		CT5				1
CT7725040J		TRIMMER CAP.		CT4				1
FB2455A13M		MECH.FILTER		CF				1
FF10275016		M. XTAL FILTER		MXF				1
LA1J51024A		COIL		L12				1
LB1JF10238A		CHOKE COIL		L20	L21			2
LD3CA3038J		RF COIL		L6				1
LD3CA3538G		COIL		L3				1
LDAD03524M		P.F.C.		L10	L8			2
LDAD04024A		RF COIL		L22	L23	L9		3
LF2B3B001N		PEAKING COIL		L16				1
LF10238015		RF COIL		L18				1
LF2B3K001N		RF COIL		L15	L4	L5		3
LF4B78001N		P.F.C.		L14				1
LF6B3K001N		RF COIL		L17	L19	L24		3

PART NAME	PART CODE
P.W.BOARD ASSY.	APTBM059CA

PART CODE	STOCK NUMBER	PART NAME	SPECIFICATIONS	SYMBOLIC OR EXPLODED VIEW NO.				Q'TY USED
LJ110H024N		CHOKE COIL		CH				1
PB555X001		SHIELD						1
PL32140001		HEAT SINK						1
PL56540001		HEAT SINK						1
PQ9314 0001		HEAT SHINK						1
PS32740004		HEAT SINK						1
PW2010S002		TERMINAL						6
PW2010S004		TERMINAL						42
PW431CX001		SHORT JUMPER						7
PW431CX002		SHORT JUMPER						2
PW431CX003		SHORT JUMPER						6
PW431CX004		SHORT JUMPER						2
PX5340001		HEAT SHINK						1
PTBM059CX		PRINTED W.BOARD						1
DD1N60XXT		GERMANIUM DIODE	NO-RANK	D20	D21	D22	D23	11
				D25	D27	D28	D29	
				D31	D33	D9		
DDG1S32XXT		GERMANIUM DIODE	1S32 VR=60VNO-RANK 25MIN	D16	D24	D34		3
DDSGP25GXG		SILICON DIODE	GP25G 400V NO-RANK	D43				1
DDSMA150XN		SILICON DIODE	MA150 VF=1.2V,VR=35V NO-RANK 24MIN	D10	D11	D12	D14	29
				D15	D17	D18	D19	
				D26	D30	D32	D35	
				D36	D37	D38	D39	

PART NAME	PART CODE
P.W.BOARD ASSY.	APTLD061AA

PART CODE	STOCK NUMBER	PART NAME	SPECIFICATIONS	SYMBOLIC OR EXPLODED VIEW NO.				QTY USED
MW401CX001		SHORT JUMPER						3
MW401CX002		SHORT JUMPER						4
MW401CX003		SHORT JUMPER						4
PTLD061AAX		PRINTED W.BOARD						1
DLELN526RN		LED		LED1				1
ZP3148101Z		LAMP		PL1	PL2	PL3	PL4	6
				PL5	PL6			
ZZZ0000000		PC JOINT.						1

PART NAME	PART CODE
P.W.BOARD ASSY.	APTPW027EA

PART CODE	STOCK NUMBER	PART NAME	SPECIFICATIONS	SYMBOLIC OR EXPLODED VIEW NO.				QTY USED
CEJE101EKX		ELYT. CAPACITOR	100MFD 25V	C502				1
CEJE220EJ		ELYT. CAPACITOR		C501				1
CKDB103ZF		CERAMIC CAP.	0.01MFD 50V -0, +100% F	C504				1
CKDB223ZF		CERAMIC CAP.	0.022MFD 50V -0, +100% F	C503	C506			2
CKDB473ZF		CERAMIC CAP.	0.047MFD 50V -20, +20% F	C505				1
KW201S005		TERMINAL						4
PTPW027CDX		PRINTED W.BOARD						1
DSGP25GXG		SILICON DIODE	GP25G 400V NO-RANK	D501	D502	D503	D504	4
DZZZ162KJ		ZENER DIODE	BZ162 VP=14V 29MIN	ZD501				1
DZZD056FAA		ZENER DIODE	RD5.6F 5.6-6.3V A-RANK	ZD502				1
DTC900XHA		TRANSISTOR	2SC900 E-RANK	Q502				1
DTC945AAA		TRANSISTOR	2SC945A P-RANK	Q501				1
RD12EJ101X		CARBON FILM R.	1/2W 100 OHM 5%	R503				1
RD12EJ122X		CARBON FILM R.	1/2W 1.2K OHM 5%	R505				1
RD12EJ221X		CARBON FILM R.	1/2W 220 OHM 5%	R501				1
RD12EJ470X		CARBON FILM R.	1/2W 47 OHM 5%	R502				1
RD12EJ821X		CARBON FILM R.	1/2W 820 OHM 5%	R504	R506			2
VR3S501B1		SEMI-FIXED VR.	500 OHM B-CURVE	RV501				1
ZEA040203U		FUSE		F501				1
ZZZ0000004		FUSE CAP						2

PART NAME	PART CODE
P.W.BOARD ASSY.	APTS8017BA

PART CODE	STOCK NUMBER	PART NAME	SPECIFICATIONS	SYMBOLIC OR EXPLODED VIEW NO.	QTY USED
CCDB130CPM		CERAMIC CAP.	PK 13PF 50V -0.25, +0.25PF	C504	1
CKDB103PEM		CERAMIC CAP.	0.01MFD 50V -0, +100% E	C503	1
CKUB103NXX		CERAMIC CAP.	0.01MFD 50V -30, +30%	C501 C502	2
MW401CX002		SHORT JUMPER		J501 J502	2
PTS8017C0X		PRINTED W.BOARD			1
DDGIN60XXT		GERMANIUM DIODE	NO-RANK	D501 D502	2
RD25TJ101X		CARBON FILM R.	0.25W 100 OHM 5%	R501 R502	2
RD25TJ103X		CARBON FILM R.	0.25W 10K OHM 5%	R503 R504	2
RPRN32201		SEMI-FIXED VR.	20K OHM B-CURVE	RV501	1
ZAA1341020		RELAY		Z81	1

PART NAME	PART CODE
P.W.BOARD ASSY.	APTS4024JA

PART CODE	STOCK NUMBER	PART NAME	SPECIFICATIONS	SYMBOLIC OR EXPLODED VIEW NO.	QTY USED
PTS4024C0X		PRINTED W.BOARD			1
S2PR4C22PM		ROTARY SWITCH		S1	1

PART NAME	PART CODE
P.W.BOARD ASSY.	APTSW0728A

PART CODE	STOCK NUMBER	PART NAME	SPECIFICATIONS	SYMBOLIC OR EXPLODED VIEW NO.				Q'TY USED
RD25FJ123X		CARBON FILM R.	0.25W 1K OHM 5%	R723				1
RD25FJ104X		CARBON FILM R.	0.25W 100K OHM 5%	R709				1
RD25FJ471X		CARBON FILM R.	0.25W 470 OHM 5%	R707				1
RD25FJ821X		CARBON FILM R.	0.25W 820 OHM 5%	R722				1
RD25VJ103X		CARBON FILM R.	0.25W 10K OHM 5%	R720				1
RD25VJ104X		CARBON FILM R.	0.25W 100K OHM 5%	R702	R710	R725		3
RD25VJ152X		CARBON FILM R.	0.25W 1.5K OHM 5%	R711				1
RD25VJ153X		CARBON FILM R.	0.25W 15K OHM 5%	R701	R703	R713		3
RD25VJ221X		CARBON FILM R.	0.25W 220 OHM 5%	R714				1
RD25VJ222X		CARBON FILM R.	0.25W 2.2K OHM 5%	R705				1
RD25VJ223X		CARBON FILM R.	0.25W 22K OHM 5%	R721				1
RD25VJ331X		CARBON FILM R.	0.25W 330 OHM 5%	R704	R715			2
RD25VJ332X		CARBON FILM R.	0.25W 3.3K OHM 5%	R706				1
RD25VJ682X		CARBON FILM R.	0.25W 6.8K OHM 5%	R708	R712	R719		3
SLD2220679		LEVER SWITCH		S5	S6	S7	S8	5
				S9				

PART NAME	PART CODE
P.W.BOARD ASSY.	APTSW0728A

PART CODE	STOCK NUMBER	PART NAME	SPECIFICATIONS	SYMBOLIC OR EXPLODED VIEW NO.				Q'TY USED
CCDB271K2M		CERAMIC CAP.	270PF 50V -10, +10% SL	C702				1
CEED470ALX		ELYT. CAPACITOR	47MFD 16V	C705	C706			2
CEEF3R3ALX		ELYT. CAPACITOR	3.3MFD 25V	C715				1
CEEF4R7ALX		ELYT. CAPACITOR	4.7MFD 25V	C701	C704			2
CEHG0R1ZVN		ELYT. CAPACITOR	0.1MFD 50V MS	C713				1
CQMB102KEH		MYLAR CAPACITOR	1000PF 50V -10, +10%	C703				1
CQMB103KEH		MYLAR CAPACITOR	0.01MFD 50V -10, +10%	C712	C716			2
CQMB123KEH		MYLAR CAPACITOR	0.012MFD 50V -10, +10%	C710				1
CQMB153KEH		MYLAR CAPACITOR	0.015MFD 50V -10, +10%	C709				1
CQMB223KEH		MYLAR CAPACITOR	0.022MFD 50V -10, +10%	C711	C714	C717		3
CQMB333KEH		MYLAR CAPACITOR	0.033MFD 50V -10, +10%	C708				1
CQMB822KEH		MYLAR CAPACITOR	8200PF 50V -10, +10%	C707				1
KN2219S03		TERMINAL						26
KN4010X031		SHORT JUMPER		J1	J2			2
KN4017X003		SHORT JUMPER		J4				1
KN4010X034		SHORT JUMPER		J3	J5			2
PTSW0728X		PRINTED W.BOARD						1
QDG1460XXT		GERMANIUM DIODE	NO-RANK	D702	D704			2
QDSM150XN		SILICON DIODE	MA150 VF=1.2V,VR=35V NO-RANK 24MIN	D701				1
QTA628XAF		TRANSISTOR	2SA628 F-RANK	Q704				1
QTC900XRA		TRANSISTOR	2SC900 F-RANK	Q702				1
QTC945AAA		TRANSISTOR	2SC945A P-RANK	Q703	Q707			2
QTC1312XAF		TRANSISTOR	2SC1312 G-RANK	Q701				1

PART NAME	PART CODE
P.W.BOARD ASSY.	APTSW076AA

PART CODE	STOCK NUMBER	PART NAME	SPECIFICATIONS	SYMBOLIC OR EXPLODED VIEW NO.				QTY USED
PTSW076A0X		PRINTED W.BOARD						1
DDSN4448XZ		SILICON DIODE	1N4448 VRM=100V NO-BANK	D251	D252	D253	D254	14
				D255	D256	D257	D258	
				D259	D260	D261	D262	
				D263	D264			
RC1B2M07N		RESISTOR ARRY		ARY251	ARY252			2

PART NAME	PART CODE
P.W.BOARD ASSY.	APLZ0243A

PART CODE	STOCK NUMBER	PART NAME	SPECIFICATIONS	SYMBOLIC OR EXPLODED VIEW NO.	QTY USED
CEAE4V7ALX		ELYT. CAPACITOR	4.7MFD 25V	C1	1
HH2429Y001		HOLDER			1
PZZZ376A0X		PRINTED W.BOARD			1
RY1341017		RELAY		RY1	1

PART NAME	PART CODE
P.W.BOARD ASSY.	APT0S006CA

PART CODE	STOCK NUMBER	PART NAME	SPECIFICATIONS	SYMBOLIC OR EXPLODED VIEW NO.				QTY USED
CBD1E102KM		CERAMIC CAP.		C16	C18	C25	C39	5
				C40				
CBD1E103KM		CERAMIC CAP.		C34	C37			2
CBD1E122KM		CERAMIC CAP.		C19				1
CBD1E223KM		CERAMIC CAP.		C7				1
CBD1E472KM		CERAMIC CAP.		C38	C6			2
CBD1E473KM		CERAMIC CAP.		C36				1
CCDB020CPM		CERAMIC CAP.	PK 2PF 50V -0.25, +0.25PF	C35				1
CCDB030CPM		CERAMIC CAP.	PJ 3PF 50V -0.25, +0.25PF	C20				1
CCDB050CPM		CERAMIC CAP.	PH 5PF 50V -0.25, +0.25PF	C13				1
CCDB120KPM		CERAMIC CAP.	12PF 50V -10, +10% PH	C14				1
CCDB150KPM		CERAMIC CAP.	15PF 50V -10, +10% PH	C21				1
CCDB220KPM		CERAMIC CAP.	22PF 50V -10, +10% PH	C12				1
CCDB221KPM		CERAMIC CAP.	220PF 50V -10, +10% PH	C23				1
CCDB680KPM		CERAMIC CAP.	68PF 50V -10, +10% PH	C10	C17			2
CCDB820KPM		CERAMIC CAP.	82PF 50V -10, +10% PH	C9				1
CEAB470M1X		ELYT. CAPACITOR	47MFD 6.3V	C4				1
CEAD100M1X		ELYT. CAPACITOR	10MFD 16V	C3	C42			2
CEAD330M1X		ELYT. CAPACITOR	33MFD 16V	C33				1
CEAG010M1X		ELYT. CAPACITOR	1MFD 50V	C28	C32	C41		3
CKD8103KBU		CERAMIC CAP.	0.01MFD 50V -10, +10% B	C26	C27	C29	C30	4
CKD8473ZFM		CERAMIC CAP.	0.047MFD 50V -20, +20% F	C22	C5			2
CQMB102KFH		MYLAR CAPACITOR	1000PF 50V -10, +10%	C8				1

PART NAME	PART CODE
P.W.BOARD ASSY.	APT0S006CA

PART CODE	STOCK NUMBER	PART NAME	SPECIFICATIONS	SYMBOLIC OR EXPLODED VIEW NO.				QTY USED
CQMB154KFH		MYLAR CAPACITOR	0.15MFD 50V -10, +10%	C31				1
CQMB561KFH		MYLAR CAPACITOR	560PF 50V -10, +10%	C11				1
CSSE922M0C		TANTALUM CAP.	0.22MFD 35V -20, +20%	C2				1
CSSE921M0C		TANTALUM CAP.	0.1MFD 35V -20, +20%	C1				1
CT7520H01		TRIMMER CAP.		CT1	CT2	CT3	CT4	5
				CT5				
LF151K001S		RF COIL		L3				1
LF282K002S		RF COIL		L1				1
LF680K001S		RF COIL		L2				1
MW2018S002		TERMINAL						28
MW401CX001		SHORT JUMPER						3
MW401CX003		SHORT JUMPER						2
MW401CX004		SHORT JUMPER						2
PT0S006A0X		PRINTED W.BOARD						1
QDCTT310X0		VARI-CAP. DIODE	1TT310 12V NO-RANK 26MIN	D4	D5	D6		3
QDSN4448KZ		SILICON DIODE	1N4448 VRM=100V NO-RANK	D1	D10	D2	D7	6
				D8	D9			
QDZMZ305CE		ZENER DIODE		D3				1
QIMAN240PN		I.C.	AN240P	IC3				1
QIMC3001AT		I.C.	TA7310P D-RANK C30014-D 9-PIN	IC2				1
QIOPLL02AN		I.C.	PLL02A(MN6040)	IC1				1
QTC0710X8E		TRANSISTOR	2SC710 D-RANK	Q2	Q3	Q4	Q5	4
QTC0900X8A		TRANSISTOR	2SC900 E-RANK	Q1				1

PART NAME	PART CODE
P.W.BOARD ASSY.	AP10S0060A

PART CODE	STOCK NUMBER	PART NAME	SPECIFICATIONS	SYMBOLIC OR EXPLODED VIEW NO.	QTY USED
2T0636Y8N		TRANSISTOR	2S0636 O,R-BANK	Q6 Q7 Q8	3
2025VJ101X		CARBON FILM R.	0.25W 100 OHM 5%	R26	1
2025VJ102X		CARBON FILM R.	0.25W 1K OHM 5%	R15 R25	2
2025VJ103X		CARBON FILM R.	0.25W 10K OHM 5%	R23	1
2025VJ104X		CARBON FILM R.	0.25W 100K OHM 5%	R17 R20 R8	3
2025VJ105X		CARBON FILM R.	0.25W 1M OHM 5%	R3	1
2025VJ153X		CARBON FILM R.	0.25W 15K OHM 5%	R19 R22	2
2025VJ222X		CARBON FILM R.	0.25W 2.2K OHM 5%	R10 R27	2
2025VJ223X		CARBON FILM R.	0.25W 22K OHM 5%	R21	1
2025VJ272X		CARBON FILM R.	0.25W 2.7K OHM 5%	R13	1
2025VJ332X		CARBON FILM R.	0.25W 3.3K OHM 5%	R1 R24 R31 R7	4
2025VJ471X		CARBON FILM R.	0.25W 470 OHM 5%	R14 R16 R6	3
2025VJ472X		CARBON FILM R.	0.25W 4.7K OHM 5%	R29	1
2025VJ473X		CARBON FILM R.	0.25W 47K OHM 5%	R28 R30	2
2025VJ474X		CARBON FILM R.	0.25W 470K OHM 5%	R4 R5	2
2025VJ563X		CARBON FILM R.	0.25W 56K OHM 5%	R18	1
2025VJ681X		CARBON FILM R.	0.25W 680 OHM 5%	R2	1
2025VJ682X		CARBON FILM R.	0.25W 6.8K OHM 5%	R12 R37	2
2025VJ820X		CARBON FILM R.	0.25W 82 OHM 5%	R11 R9	2
2PGM32031		SEMI-FIXED VR.	2K OHM B-CURVE	RV3	1
2PGM32031		SEMI-FIXED VR.	20K OHM B-CURVE	RV1 RV2	2
T207LA005N		I.F.T.		T4	1
T207LA023N		I.F.T.		T5	1

PART NAME	PART CODE
P.W.BOARD ASSY.	AP10S0060A

PART CODE	STOCK NUMBER	PART NAME	SPECIFICATIONS	SYMBOLIC OR EXPLODED VIEW NO.	QTY USED
T210M8022S		RF COIL		T1	1
T210M8023T		I.F.T.		T2	1
T210M8025S		RF COIL		T3	1
VK1115C001		SPACER			1
XASI3301X		XTAL OSCILLATOR		X1	1
XASIC1021X		XTAL OSCILLATOR		X2	1
XCSIC1022X		XTAL OSCILLATOR		X3	1
XCSIC1023X		XTAL OSCILLATOR		X4	1
YSX0100017		XTAL SOCKET			2
ZZZ0000043		V.C.O. BLOCK		VCO	1

BRUSSELSESTEENWEG, 416
B-9218 GENT
BELGIUM
TEL.: 00-32-91-31.21.11
TELEX: 12521 HAM B

KTJUMBO-AX