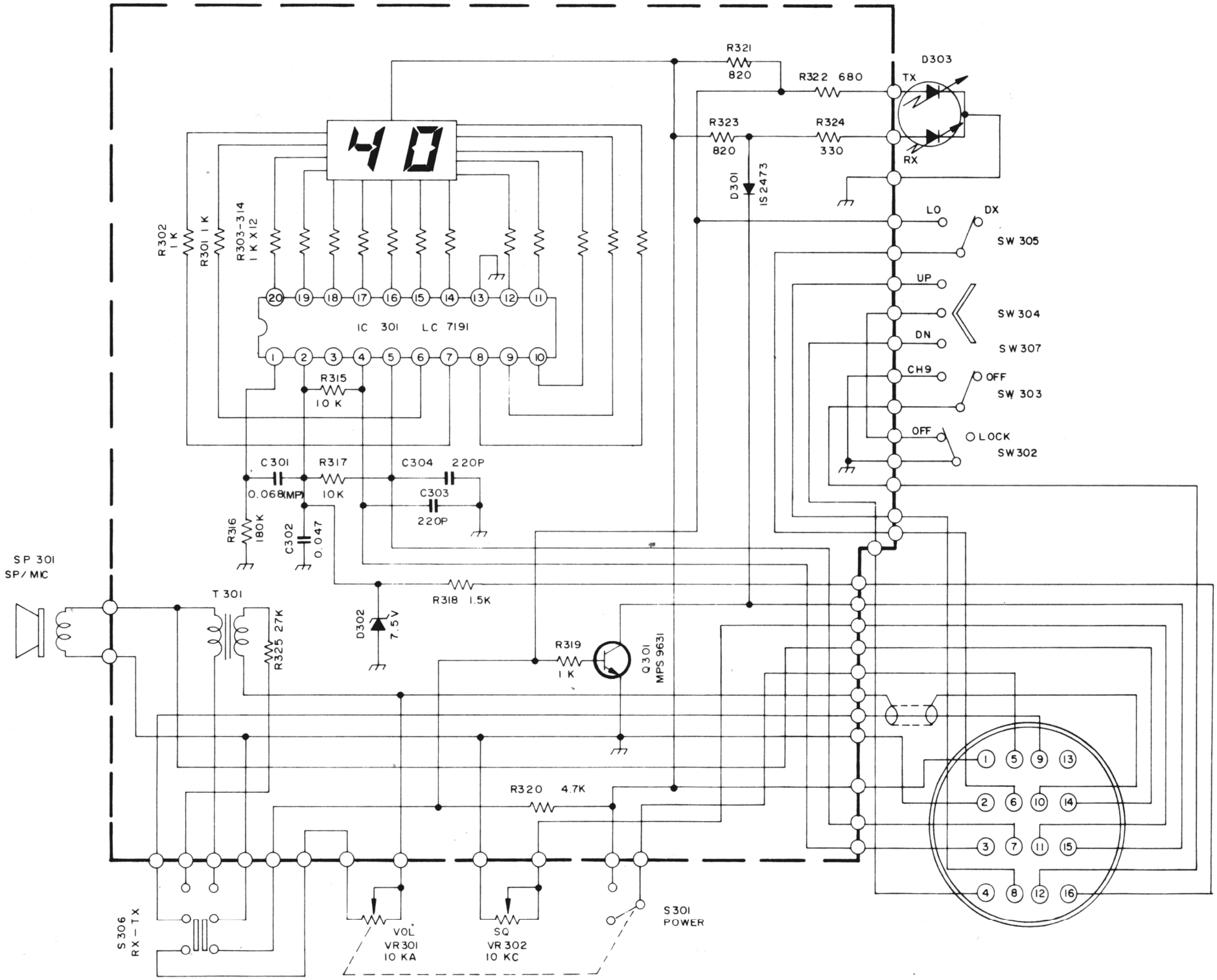
R321
820
R322 680
D303
TX
RX
R323
820
R324
330
D301
IS2473
LO
DX
SW 305
UP
SW 304
DN
SW 307
CH9
OFF
SW 303
OFF
LOCK
SW302
R302
1 K
R301 1 K
R303-314
1 K X 12
IC 301 LC 7191
R315
10 K
C301
0.068(MP)
R317
10K
C304 220P
C303
220P
R316
180K
C302
0.047
SP 301
SP/MIC
T 301
R325 27K
D302
7.5V
R318 1.5K
R319
1 K
Q301
MPS 9631
R320 4.7K
S306
RX-TX
VOL
VR301
10 KA
SQ
VR 302
10 KC
S301
POWER