Tristar 240; 120 Ch. AM (LC7131-PLL)

This is another EXPORT unit.. A DELUXE version, with frequency range of 26.515-27.855MHz. Study the 'Delta Tune' circuitry very carefully and will see that it can be modified to tune both TX/RX as in SSB 'slide'. Tuneup: RV1-Rx Mtr, RV3-Sq Rng, RV4-TX Frequency Adj, RV5-Tx Mtr, RV6-AWI. RX-T1, T2, T13, T3, T4, and T5. TX-T8, T9, and T10. Increase C220 for less noise. ~~R106~~ D22 is the AMC disable if needed. This unit has a 10W/3A RF Final. CF2 may be doubled up for better rejection.

The present crystals: 21.84MHz = 27.415-27.855
21.39MHz = 26.965-27.405
20.94MHz = 26.515-26.955

Overall.....is an excellent unit for someone that is looking for an "Ancient Mary" rig.

CRYSTAL BOARD SCHEMATIC

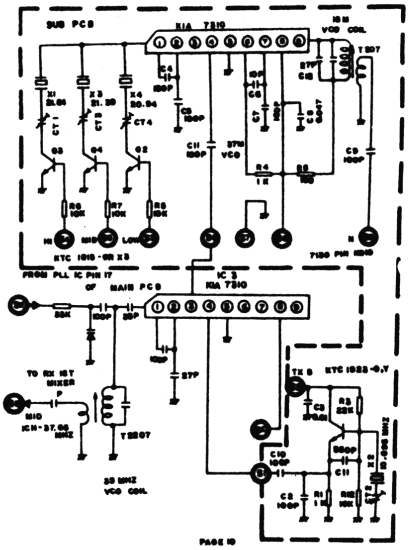
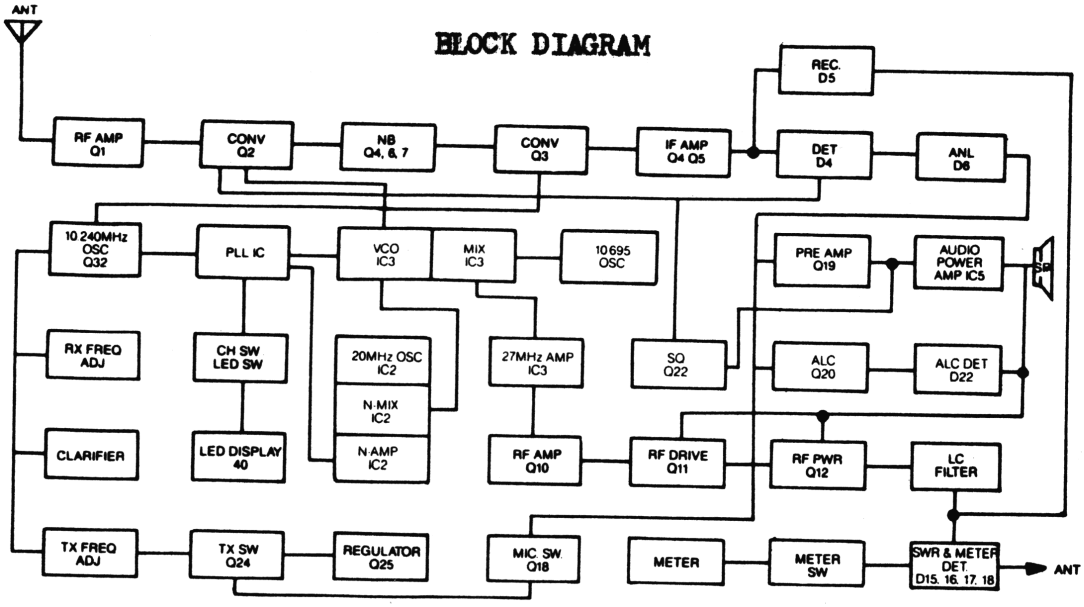
BLOCK DIAGRAM