CORRECTIONS

Vol. 21, page 46: Change drawing label on coil next to final to L11, instead of L10. See correction below....

Component Side of PCB

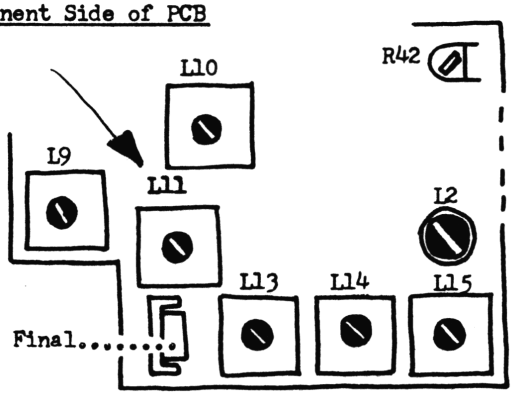

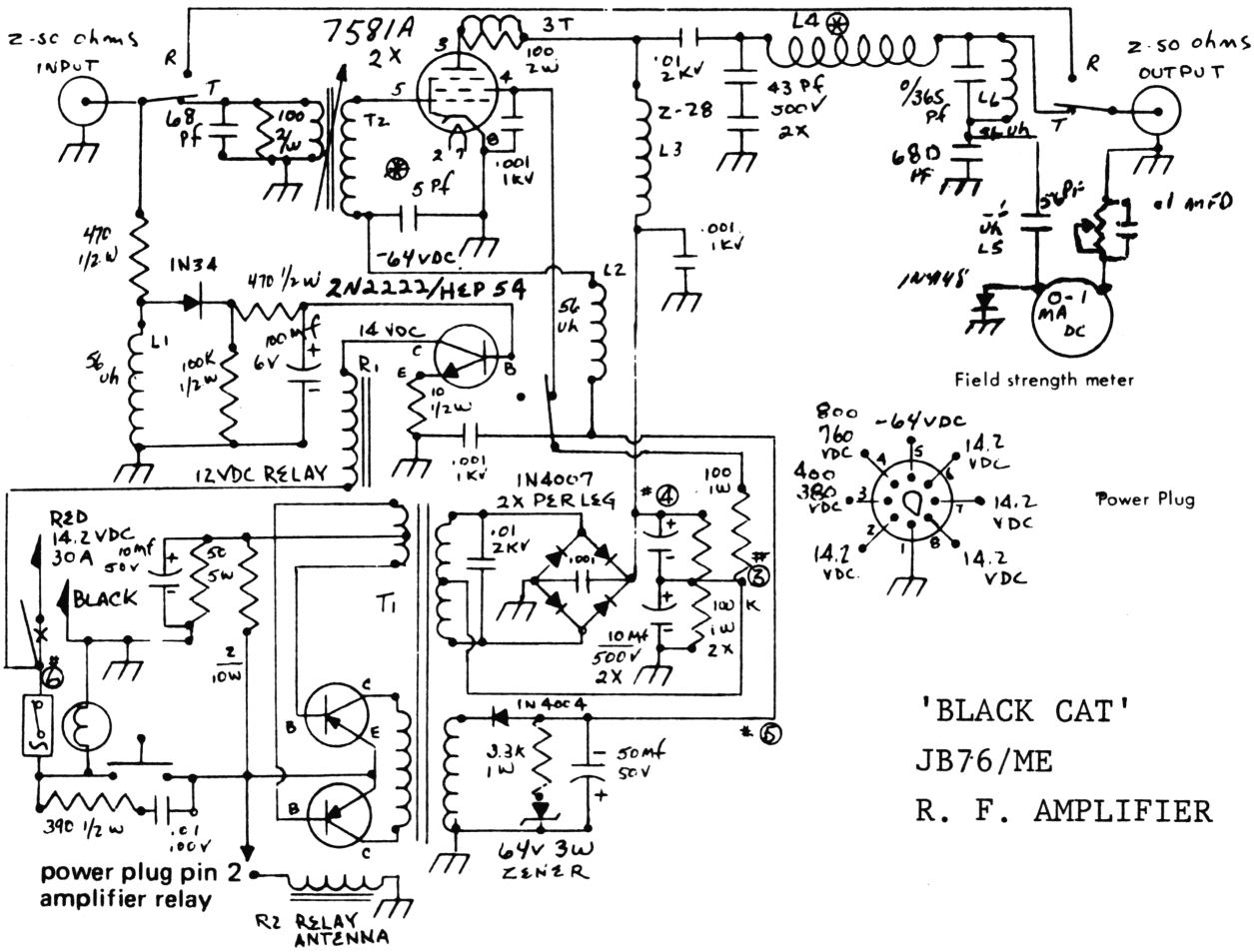

'BLACK CAT'

JB76/ME

R. F. AMPLIFIER