ANOTHER 8719 MODIFICATION

COBRA 140/142 GTL
PRESIDENT WASHINGTON
REALISTIC TRC450,ETC.

This gives you coverage from 26.815 to 28.085 with no skips.
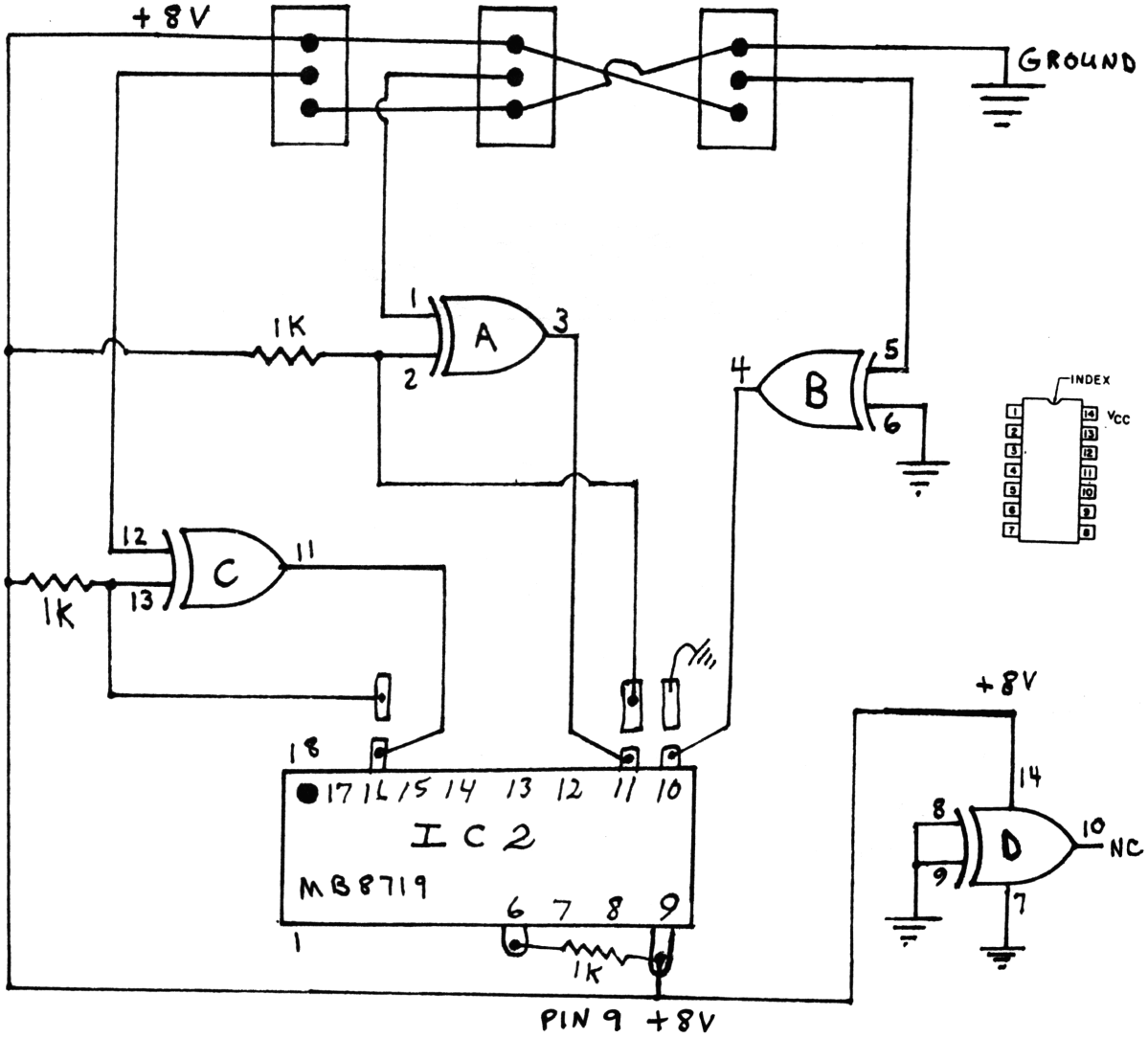
1. Cut the trace at pins 10, 11, & 16.
2. Wire 3 SPDT Switches and a CD4070 Exclusive OR gate as diagramed.
3. Remove D25 on Pin 6.
4. Install a 1000 ohm ½W Resistor from Pin 6 to Pin 9 of IC2.